1. ALL RESISTANCE VALUES ARE IN OHMS, 0.1 WATT +/- 5%.
2. ALL CAPACITANCE VALUES ARE IN MICROFARADS.
3. ALL CRYSTALS & OSCILLATOR VALUES ARE IN HERTZ.

X1782 MLB SCHEMATIC

REV	ECN	DESCRIPTION OF REVISION	CK APPD / DATE
6	0021824637	ENGINEERING RELEASED	2020-01-24

PAGE	CSA	CONTENTS	SYNC	DATE
1	1	TABLE OF CONTENTS		
2	2	SYSTEM PCB SUMMARY		
3	4	PD PARTS		
4	5	CPU GFX		
5	6	CPU MISC/JTAG/CFG/RSVD		
6	7	CPU LPDDR3 INTERFACE		
7	8	CPU & PCH POWER		
8	9	CPU & PCH GROUNDS		
9	10	CPU CORE DECOUPLING		
10	11	CPU GT DECOUPLING		
11	12	PCH DECOUPLING		
12	13	PCH AUDIO/LPC/SPI/SMBUS		
13	14	PCH POWER MANAGEMENT		
14	15	PCH PCIE/USB/CLKS		
15	16	PCH SPI/UART/GPIO		
16	18	CPU/PCH MERGED XDP		
17	19	CHIPSET SUPPORT 1		
18	20	CHIPSET SUPPORT 2		
19	22	LPDDR3 VREF MARGINING		
20	23	LPDDR3 DRAM CHANNEL A (00-31)		
21	24	LPDDR3 DRAM CHANNEL A (32-63)		
22	25	LPDDR3 DRAM CHANNEL B (00-31)		
23	26	LPDDR3 DRAM CHANNEL B (32-63)		
24	27	LPDDR3 DRAM TERMINATION		
25	28	USB-C HIGH SPEED 1		
26	29	USB-C HIGH SPEED 2		
27	30	USB-C SUPPORT		
28	31	USB-C PORT CONTROLLER A		
29	32	USB-C PORT CONTROLLER B		
30	33	USB-C CONNECTOR A		
31	36	WIFI/BT SUPPORT	J223_METE	05/14/2019
32	37	WIFI/BT MODULE 1	J223_METE	05/14/2019
33	38	WIFI/BT MODULE 2	J223_METE	05/14/2019
34	39	SOC GPIO/SEP/USB/DDR/TEST		
35	40	SOC AOP/AON/SMC		
36	41	SOC ISP/I2C/UART/SPI/I2S		
37	42	SOC PCIE		
38	43	SOC POWER 1		
39	44	SOC POWER 2		
40	45	SOC POWER 3		
41	46	SOC GROUND		
42	47	SOC SHARED SUPPORT		
43	48	SOC PROJECT SUPPORT		
44	49	T151		
45	50	SECURE ELEMENT		
46	51	T139 SUPPORT		
47	52	I2C CONNECTIONS 1		
48	53	I2C CONNECTIONS 2		
49	54	POWER SENSORS HIGH SIDE		
50	55	POWER SENSORS LOAD SIDE		
51	56	POWER SENSORS EXTENDED		
52	57	POWER SENSORS EXTENDED 2		
53	58	THERMAL SENSORS		
54	59	POWER SENSORS EXTENDED 3		
55	60	FANS/SMC/AMUX SUPPORT		
56	62	AUDIO PLACEHOLDER		
57	63	AUDIO JACK CODEC		
58	64	AUDIO LEFT AMPLIFIERS		
59	65	AUDIO RIGHT AMPLIFIERS		
60	66	AUDIO FLEX CONNECTORS		
61	67	KEYBOARD & TRACKPAD 1	X1412_SHAN	05/17/2019
62	68	KEYBOARD & TRACKPAD 2		
63	69	BATTERY CONN, 3V3 G3H RTC VR		
64	70	PBUS SUPPLY & BATTERY CHARGER		
65	71	VR CORE & SA IMVP CTRL		
66	72	VR CORE & SA IMVP		
67	74	VR GT & GTX IMVP		
68	76	VR 5V, 3V3		
69	77	VR EOPIO EDRAM		
70	78	PMIC BUCKS AND SWS		
71	79	PMIC LDOS		
72	80	PMIC GPIOS & CONTROL		
73	81	VR VDDQ VCCIO		
74	82	POWER FETS		
75	84	LCD BACKLIGHT DRIVER		
76	85	EDP DISPLAY CONNECTOR		
77	86	S4E<0>		
78	87	S4E<1>		
79	88	S4E<2>		
80	89	S4E<3>		
81	90	OCARINA PMIC & NAND VCC VR & VDDIO1 SWCH		
82	96	SSD SUPPORT		
83	124	FCT		
84	125	PROBE POINTS		
85	135	DESENSE 1		
86	136	DESENSE 2		
87	137	DESENSE 3		
88	138	DESENSE 4		
89	140	DEV SUPPORT 1		
90	141	DEV SUPPORT 2		
91	400	BOM CONFIGURATION		
92	401	BOM CONFIGURATION		
93	403	BOM GROUPS		
94	405	BOM VARIANT TABLES		
95	406	BOM VARIANT TABLES		
96	407	BOM VARIANT TABLES		
97	410	BOM ALTERNATES		
98	500	BOARD RULES		

LAST_MODIFICATION=Fri Jan 17 17:25:04 2020

DRAWING TITLE: SCHEM,MLB,X1782

Apple Inc.

DRAWING NUMBER: 051-05309 SIZE: D

REVISION: 6.0.0

BRANCH: pvt

PAGE: 1 OF 500

SHEET: 1 OF 98

NOTICE OF PROPRIETARY PROPERTY:

THE INFORMATION CONTAINED HEREIN IS THE PROPRIETARY PROPERTY OF APPLE INC. THE POSESSOR AGREES TO THE FOLLOWING:
I TO MAINTAIN THIS DOCUMENT IN CONFIDENCE
II NOT TO REPRODUCE OR COPY IT
III NOT TO REVEAL OR PUBLISH IT IN WHOLE OR PART
IV ALL RIGHTS RESERVED

DESIGN	DESCRIPTION	SCHEMATIC	BOARD	MCO	PANEL
J223/MLB	POR CFL MLB	051-05309	820-01987	056-09380	057-01595-D
J213/FLEX_AUDIOJACK	AUDIO JACK, AMR, AND MESA	051-04122	821-02091	056-07548-27	N/A
J680/FLEX_USBC	LEFT SIDE USB TONGUE FLEX	051-03140	821-01646	056-05483-A	N/A
J130/FLEX_BMU_SIGNAL	SIGNALS TO BMU	051-01247	821-01726	056-05589-A	N/A
J130/FLEX_BMU_PWR	POWER TO/FROM BMU	051-01195	821-00583	056-02919-A	N/A
J130/FLEX_TCON_MLB_A	DISPLAYPORT FROM MLB TO TCON	051-01897	821-00981	056-02852-A	N/A
J213/FLEX_TRACKPAD	MLB TO TRACKPAD	051-04335	821-02218	056-07655-08	N/A
J130/FLEX_KB	KB FLEX FOR ALL 3 KB TYPES	051-02011	821-01046	056-03725-B	N/A
J213/FLEX_3MIC	MIC FLEX	051-04441	821-02265	056-07754-24	N/A
J79/GRAPE_FLEX	DFR TOUCH FLEX	051-01338	821-00681	056-02220-A	N/A
DFR DAUGHTER FLEX	DFR DAUGHTER FLEX	VENDOR	VENDOR	099-14398	N/A

PAGE TITLE
SYSTEM PCB SUMMARY

Apple Inc.

DRAWING NUMBER 051-05309
SIZE D
REVISION 6.0.0
BRANCH pvt
PAGE 2 OF 500
SHEET 2 OF 98

NOTICE OF PROPRIETARY PROPERTY:
THE INFORMATION CONTAINED HEREIN IS THE PROPRIETARY PROPERTY OF APPLE INC.
THE POSESSOR AGREES TO THE FOLLOWING:
I TO MAINTAIN THIS DOCUMENT IN CONFIDENCE
II NOT TO REPRODUCE OR COPY IT
III NOT TO REVEAL OR PUBLISH IT IN WHOLE OR PART
IV ALL RIGHTS RESERVED

TOP SIDE STANDOFFS

OMIT_TABLE
Z0400
2.80D1.2ID-1.49H-SM
CRITICAL
860-01216
EAST OF NAND ALIGNED WITH BOTTOM SIDE STANDOFF

OMIT_TABLE
Z0401
2.80D1.2ID-1.49H-SM
CRITICAL
860-01216
NORTH OF NAND

OMIT_TABLE
Z0402
2.80D1.2ID-1.49H-SM
CRITICAL
860-01216
NORTH OF NAND

OMIT_TABLE
Z0404
2.80D1.2ID-1.49H-SM
CRITICAL
860-01216
FAR SIDE NEAR AJ CONN

OMIT_TABLE
Z0405
2.80D1.2ID-1.49H-SM
CRITICAL
860-01216
SOUTH OF NAND

OMIT_TABLE
Z0406
2.80D1.2ID-1.49H-SM
CRITICAL
860-01216
NORTH OF NAND

BOTTOM SIDE TALL STANDOFF

OMIT_TABLE
Z0460
2.80D1.2ID-3.15H-SM
860-01485
EAST OF NAND ALIGNED WITH TOP SIDE STANDOFF

POGO PIN HEAT PIPE

CRITICAL
PP0499
POGO-2.30D-4.0H-SM
SM-1
870-09667

USB-C BOSS

CRITICAL
Z0420
3.40D1.75ID-1.12H-SM
860-00392

CRITICAL
Z0421
3.40D1.75ID-1.12H-SM
860-00392

DFR BOSS

CRITICAL
Z0430
3.40D1.75ID-1.5H-SM
860-01484

TRACKPAD BOSS

CRITICAL
Z0440
3.50D1.85ID-1.41H-SM
860-00381

CRITICAL
Z0441
3.50D1.85ID-1.41H-SM
860-00381

DISPLAY BOSS

CRITICAL
Z0450
2.7X1.8R-1.4ID-0.91H-SM
860-00469

CRITICAL
Z0451
2.7X1.8R-1.4ID-0.91H-SM
860-00469

AJ FLEX COWLING BOSS

CRITICAL
Z0470
3.50D1.85ID-1.92H-SM
860-00382

DFR WASHER

CRITICAL
Z0431
4.750D2.73ID-H0.2
RING-TH
860-01519

WIFI WASHER

CRITICAL
Z0432
4.750D2.73ID-H0.2
RING-TH
860-01519

POGO PIN FAN

CRITICAL
PP0430
POGO-2.30D-4.0H-SM
SM-1
870-09667

POGO PINS BACKLIGHT

CRITICAL
PP0400
POGO-2.30D-4.06H-SM
SM-1
870-09670

POGO PIN DISPLAY

CRITICAL
PP0420
POGO-2.30D-4.0H-SM
SM-1
870-09667

POGO PINS DRAM

CRITICAL
PP0410
POGO-2.30D-4.0H-SM
SM-1
870-09667

CRITICAL
PP0411
POGO-2.30D-4.0H-SM
SM-1
870-09667

SHIELD CAN ALIGMENT HOLES

CRITICAL
ZT0441
TH-NSP
SL-1.2X0.4-1.5X0.7
998-04440

CRITICAL
ZT0442
TH-NSP
SL-1.2X0.4-1.5X0.7
998-04440

CRITICAL
ZT0443
TH-NSP
SL-1.2X0.4-1.5X0.7
998-04440

CRITICAL
ZT0444
TH-NSP
SL-1.2X0.4-1.5X0.7
998-04440

CRITICAL
ZT0445
TH-NSP
SL-1.2X0.4-1.5X0.7
998-04440

CRITICAL
ZT0446
TH-NSP
SL-1.2X0.4-1.5X0.7
998-04440

MLB MTG HOLES 2.1X3.36 MM

CRITICAL
ZT0420
TH-NSP
SL-2.1X3.51-4.6X6.01
998-19711
NEAR RIGHT SPKR CONNECTOR

CRITICAL
ZT0421
TH-NSP
SL-2.1X3.51-4.6X6.01
998-19711
NEAR TRACKPAD CONNECTOR

CRITICAL
ZT0422
TH-NSP
SL-2.1X3.51-4.6X6.01
998-19711
NEAR LEFT SPKR CONNECTOR

CPU THERM STAGE HOLES 3.15 MM

CRITICAL
ZT0400
3P9R3P15
998-0845
CORNER NEAREST KEYBOARD

CPU THERM STAGE HOLES 3.6 MM

CRITICAL
ZT0401
4.0R3.6-NSP
998-03850

CRITICAL
ZT0402
4.0R3.6-NSP
998-03850

CRITICAL
ZT0403
4.0R3.6-NSP
998-03850

FAN MTG HOLE 2.0X2.6 MM

CRITICAL
ZT0430
TH-NSP
SL-2.6X2.0-4.7X4.1
998-03974

SHIELD CAN ALIGNMENT SLOTS DRAM

CRITICAL
SL0490
TH-NSP
SL-1.2X0.4-1.5X0.7
998-04440

CRITICAL
SL0491
TH-NSP
SL-1.2X0.4-1.5X0.7
998-04440

2X PLATED SLOTS IN MEM AREA DUE TO SPACE CONSTRAINTS <RDAR://44382678> ALL OTHER SHIELD ALIGNMENT SLOTS ARE NPTH + GND RING FOR BETTER TOLERANCE

NOTE: REFER TO BOM TABLES. ONLY SOLDERED PARTS REMAIN IN RAMP/PVT SMT BOM. OTHERS MOVED TO POST-SMT ENCLOSURE BOM

USB-C SHIELD

806-24341	1	SHIELD CAN,HOLES,TITAN RIDGE,X1781	USBC_CAN	CRITICAL	USBC_SHLD
870-08656	1	TAPE,NON COND,STIFFENER,TITAN RIDGE,CAN,X1533	USBC_CAN_TAPE	CRITICAL	USBC_TAPE

MEGA SHIELD

604-27117	1	MEGA CAN,INSULATED,X1781	MEGA_CAN	CRITICAL	MEGA_SHLD

DRAM SHIELD TOP

806-24340	1	FENCE,DRAM,UNIV,X1781	DRAM_TOP_FENCE	CRITICAL	DRAM_TOP_FENC
870-07840	1	TAPE,COND,DRAM,UNIV,X1533	DRAM_TOP_FENCE_TAPE	CRITICAL	DRAM_TOP_TAPE

DRAM SHIELD BOTTOM

806-24339	1	SHIELD CAN,HOLES,DRAM,UNIV,X1781	DRAM_BOT_CAN	CRITICAL	DRAM_BOT_CAN
870-08657	1	TAPE,NON COND,STIFFENER,DRAM,CAN	DRAM_BOT_CAN_TAPE	CRITICAL	DRAM_BOT_TAPE

LIQUID SPILL INDICATOR

825-00493	4	LSI,BLACK,REEL,X1030	LSI1,LSI2,LSI3,LSI4	CRITICAL	LSI

CPU SLEDS

806-14839	2	SLED,METAL,MATT NICKEL,X940	SLED1,SLED2	CRITICAL	CPU_SLEDS

TOP SIDE STANDOFFS

860-01216	6	BOSS,STANDOFF,MLB,X1533	Z0400-Z0402,Z0404-Z0406	CRITICAL	STANDOFFS_TOP

BOTTOM SIDE STANDOFFS

860-01485	1	BOSS,STANDOFF,MLB,TALL,X1533	Z0460	CRITICAL	STANDOFFS_BOT

BOM_COST_GROUP=MECHANICALS

SYNC_MASTER= SYNC_DATE=

PAGE TITLE
PD PARTS

Apple Inc.

DRAWING NUMBER 051-05309
SIZE D
REVISION 6.0.0
BRANCH pvt
PAGE 4 OF 500
SHEET 3 OF 98

NOTICE OF PROPRIETARY PROPERTY:
THE INFORMATION CONTAINED HEREIN IS THE PROPRIETARY PROPERTY OF APPLE INC.
THE POSESSOR AGREES TO THE FOLLOWING:
I TO MAINTAIN THIS DOCUMENT IN CONFIDENCE
II NOT TO REPRODUCE OR COPY IT
III NOT TO REVEAL OR PUBLISH IT IN WHOLE OR PART
IV ALL RIGHTS RESERVED

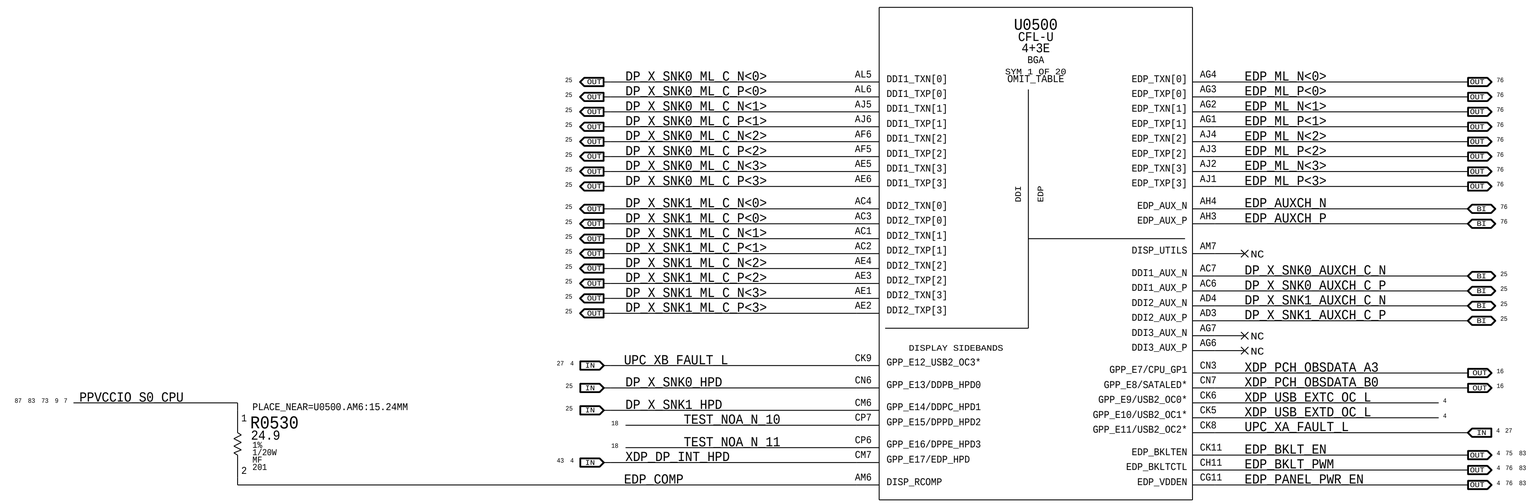

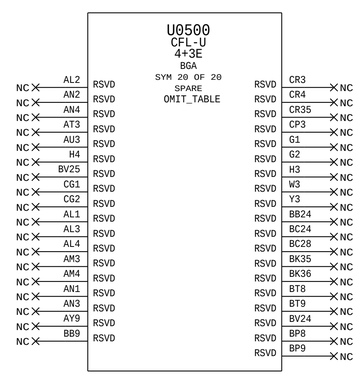

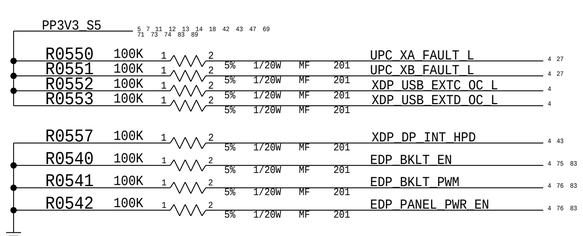

BOM_COST_GROUP=CPU & CHIPSET

PAGE TITLE
CPU GFX

Apple Inc.

DRAWING NUMBER 051-05309
SIZE D
REVISION 6.0.0
BRANCH pvt
PAGE 5 OF 500
SHEET 4 OF 98

NOTICE OF PROPRIETARY PROPERTY:
THE INFORMATION CONTAINED HEREIN IS THE PROPRIETARY PROPERTY OF APPLE INC.
THE POSESSOR AGREES TO THE FOLLOWING:
I TO MAINTAIN THIS DOCUMENT IN CONFIDENCE
II NOT TO REPRODUCE OR COPY IT
III NOT TO REVEAL OR PUBLISH IT IN WHOLE OR PART
IV ALL RIGHTS RESERVED

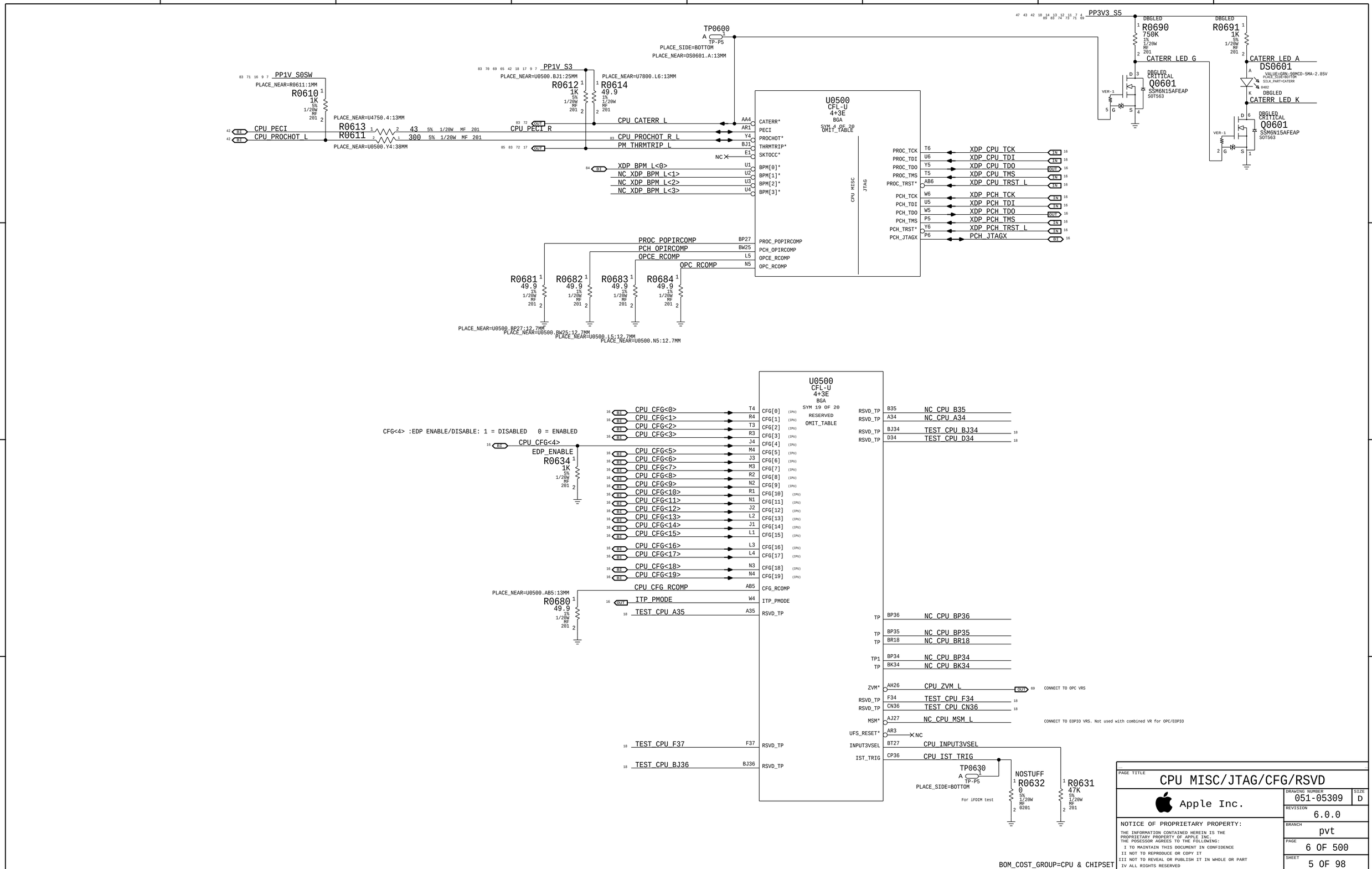

PAGE TITLE: CPU MISC/JTAG/CFG/RSVD

Apple Inc.

DRAWING NUMBER: 051-05309 SIZE: D

REVISION: 6.0.0

BRANCH: pvt

PAGE: 6 OF 500

SHEET: 5 OF 98

NOTICE OF PROPRIETARY PROPERTY:
THE INFORMATION CONTAINED HEREIN IS THE PROPRIETARY PROPERTY OF APPLE INC.
THE POSESSOR AGREES TO THE FOLLOWING:
I TO MAINTAIN THIS DOCUMENT IN CONFIDENCE
II NOT TO REPRODUCE OR COPY IT
III NOT TO REVEAL OR PUBLISH IT IN WHOLE OR PART
IV ALL RIGHTS RESERVED

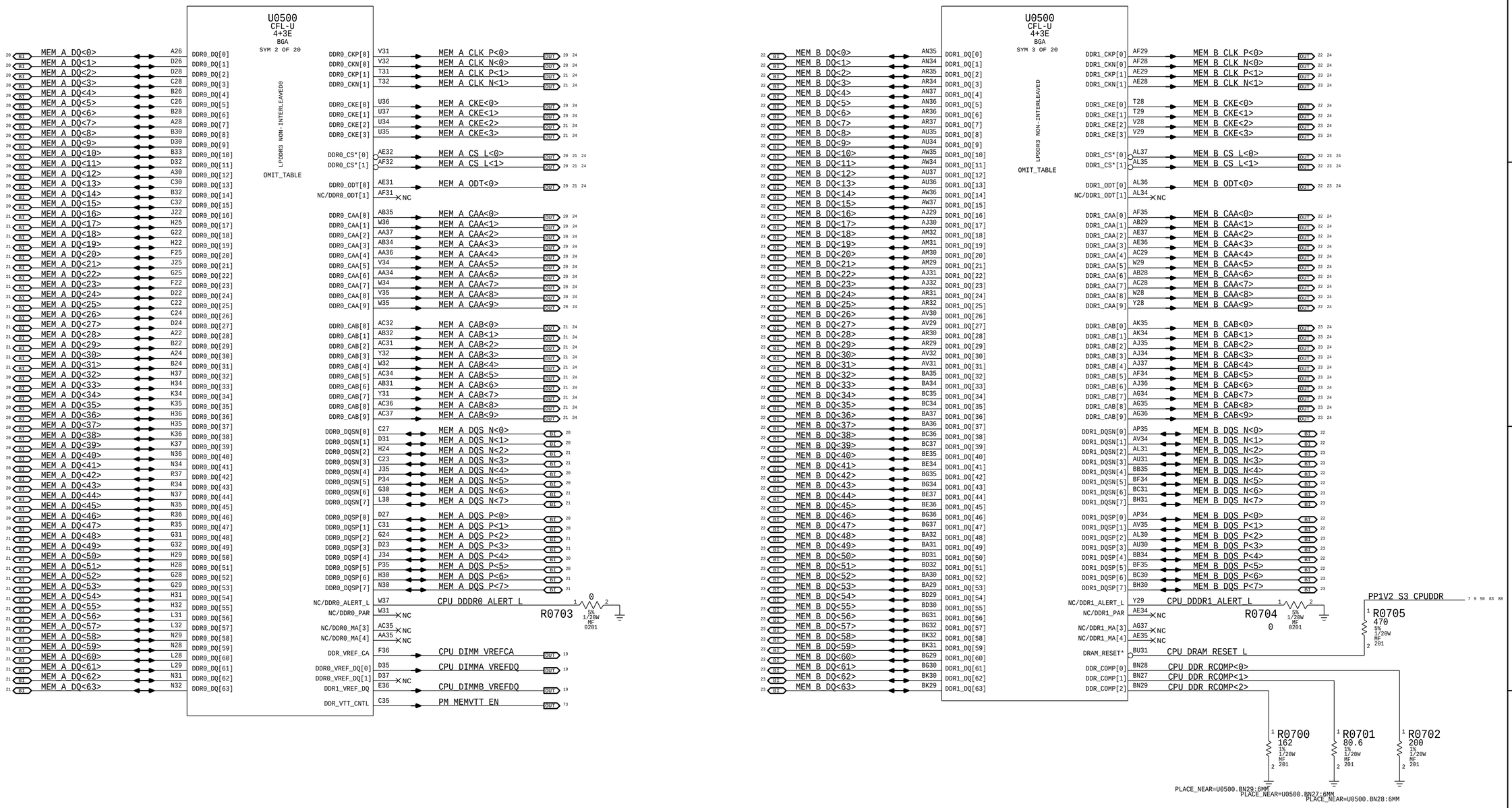

BOM_COST_GROUP=CPU & CHIPSET

PAGE TITLE

CPU LPDDR3 INTERFACE

Apple Inc.

DRAWING NUMBER	051-05309
SIZE	D
REVISION	6.0.0
BRANCH	pvt
PAGE	7 OF 500
SHEET	6 OF 98

NOTICE OF PROPRIETARY PROPERTY:

THE INFORMATION CONTAINED HEREIN IS THE PROPRIETARY PROPERTY OF APPLE INC.
THE POSESSOR AGREES TO THE FOLLOWING:
I TO MAINTAIN THIS DOCUMENT IN CONFIDENCE
II NOT TO REPRODUCE OR COPY IT
III NOT TO REVEAL OR PUBLISH IT IN WHOLE OR PART
IV ALL RIGHTS RESERVED

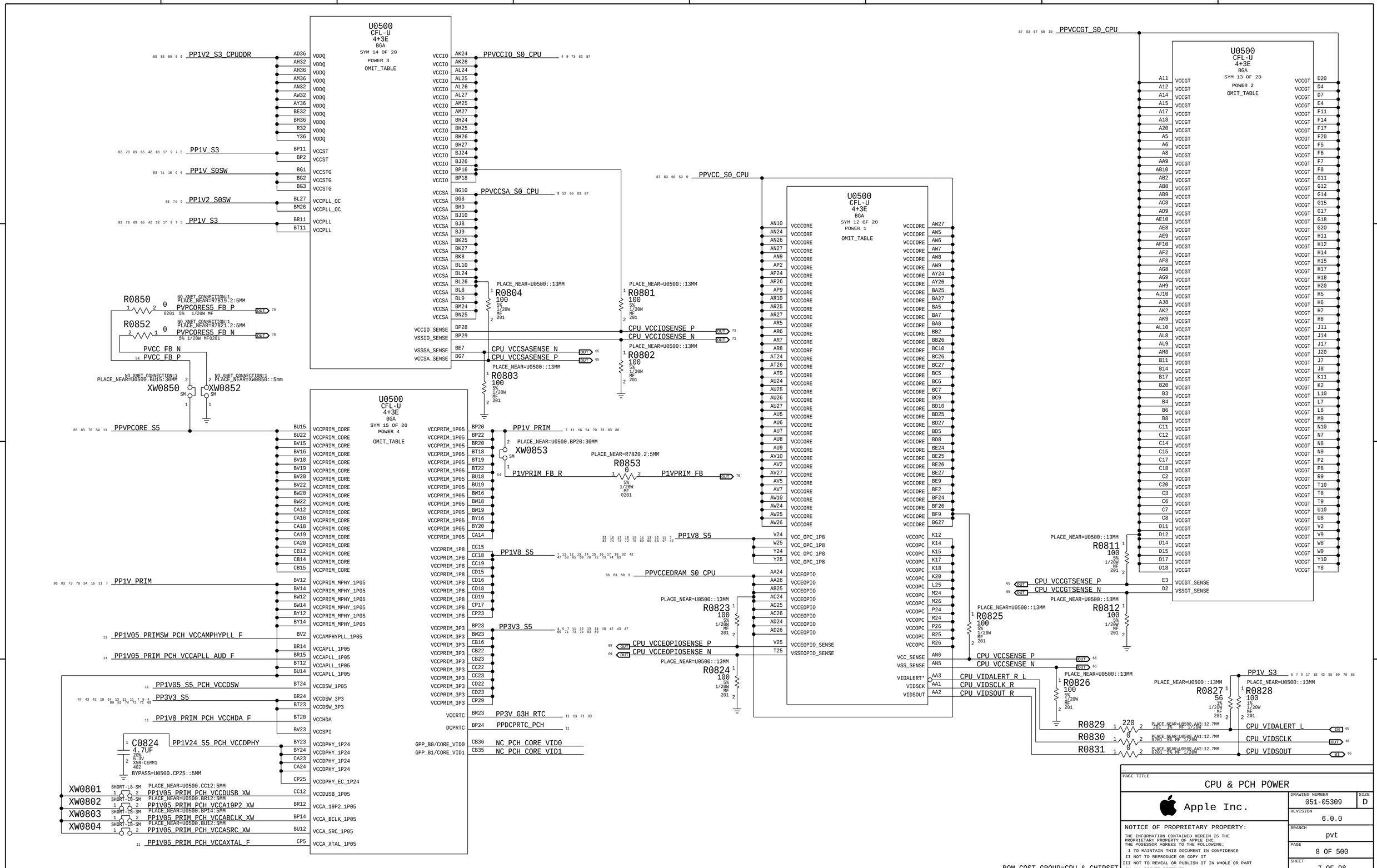

PAGE TITLE
CPU & PCH POWER

Apple Inc.

DRAWING NUMBER 051-05309
SIZE D
REVISION 6.0.0
BRANCH pvt
PAGE 8 OF 500
SHEET 7 OF 98

NOTICE OF PROPRIETARY PROPERTY:
THE INFORMATION CONTAINED HEREIN IS THE PROPRIETARY PROPERTY OF APPLE INC.
THE POSESSOR AGREES TO THE FOLLOWING:
I TO MAINTAIN THIS DOCUMENT IN CONFIDENCE
II NOT TO REPRODUCE OR COPY IT
III NOT TO REVEAL OR PUBLISH IT IN WHOLE OR PART
IV ALL RIGHTS RESERVED

BOM_COST_GROUP=CPU & CHIPSET

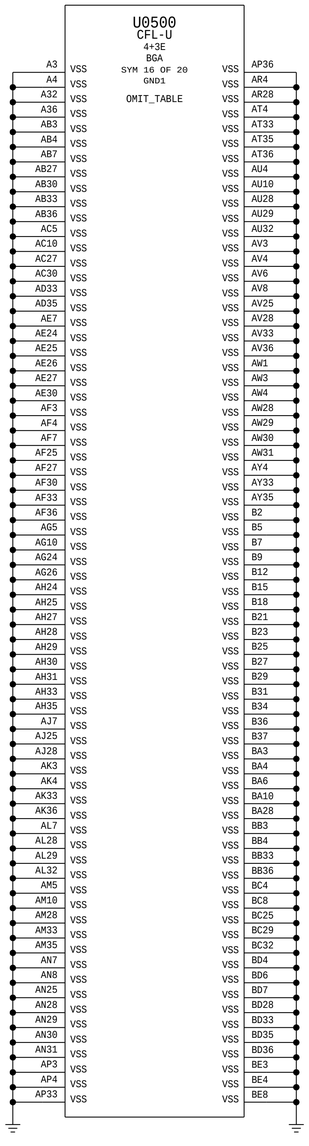

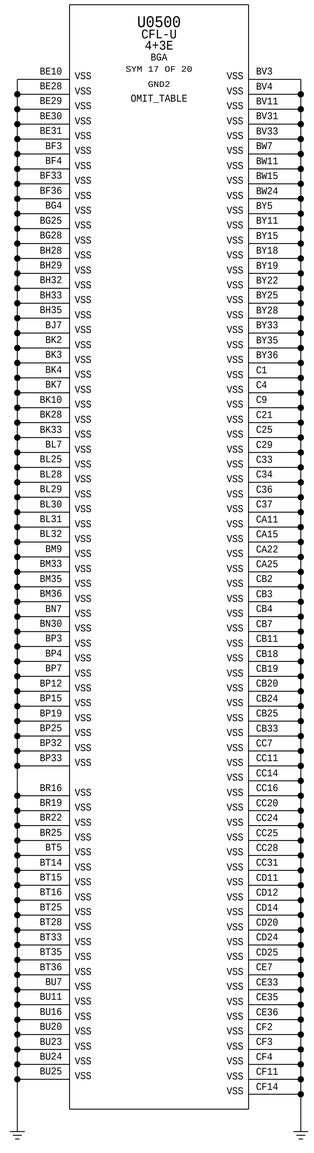

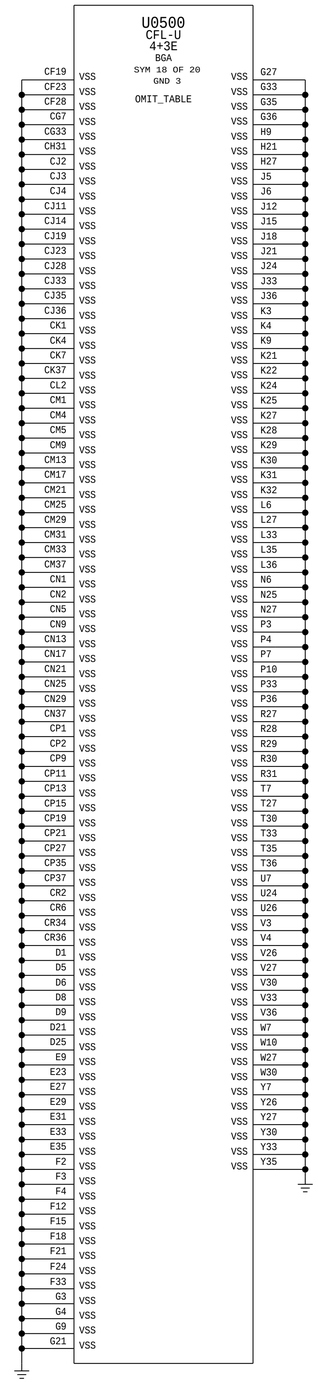

BOM_COST_GROUP=CPU & CHIPSET

PAGE TITLE
CPU & PCH Grounds

Apple Inc.

DRAWING NUMBER 051-05309
SIZE D
REVISION 6.0.0
BRANCH pvt
PAGE 9 OF 500
SHEET 8 OF 98

NOTICE OF PROPRIETARY PROPERTY:
THE INFORMATION CONTAINED HEREIN IS THE PROPRIETARY PROPERTY OF APPLE INC.
THE POSESSOR AGREES TO THE FOLLOWING:
I TO MAINTAIN THIS DOCUMENT IN CONFIDENCE
II NOT TO REPRODUCE OR COPY IT
III NOT TO REVEAL OR PUBLISH IT IN WHOLE OR PART
IV ALL RIGHTS RESERVED

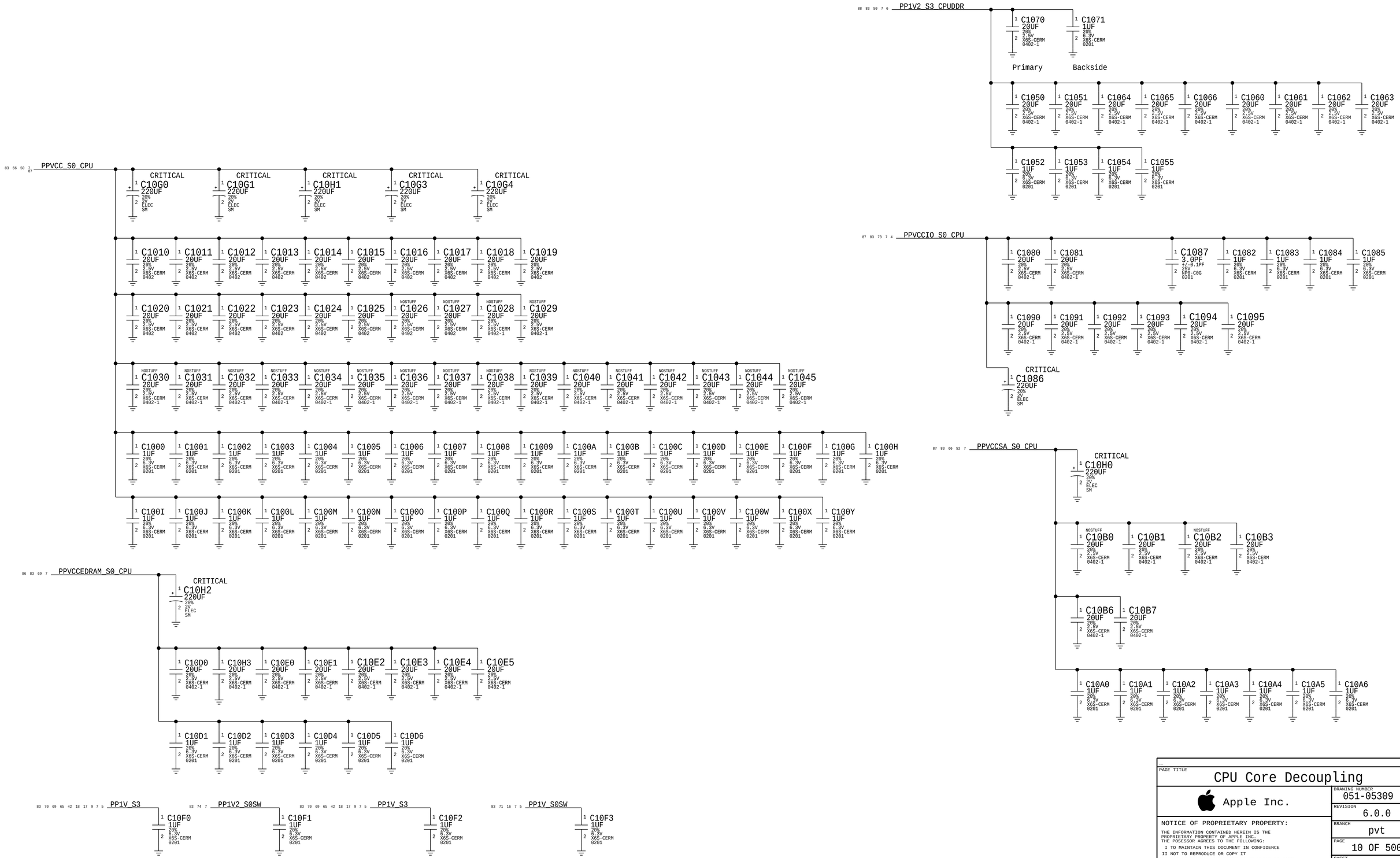

BOM_COST_GROUP=CPU & CHIPSET

PAGE TITLE

CPU Core Decoupling

Apple Inc.

DRAWING NUMBER 051-05309 | SIZE D

REVISION 6.0.0

BRANCH pvt

PAGE 10 OF 500

SHEET 9 OF 98

NOTICE OF PROPRIETARY PROPERTY:

THE INFORMATION CONTAINED HEREIN IS THE PROPRIETARY PROPERTY OF APPLE INC. THE POSESSOR AGREES TO THE FOLLOWING:

I TO MAINTAIN THIS DOCUMENT IN CONFIDENCE

II NOT TO REPRODUCE OR COPY IT

III NOT TO REVEAL OR PUBLISH IT IN WHOLE OR PART

IV ALL RIGHTS RESERVED

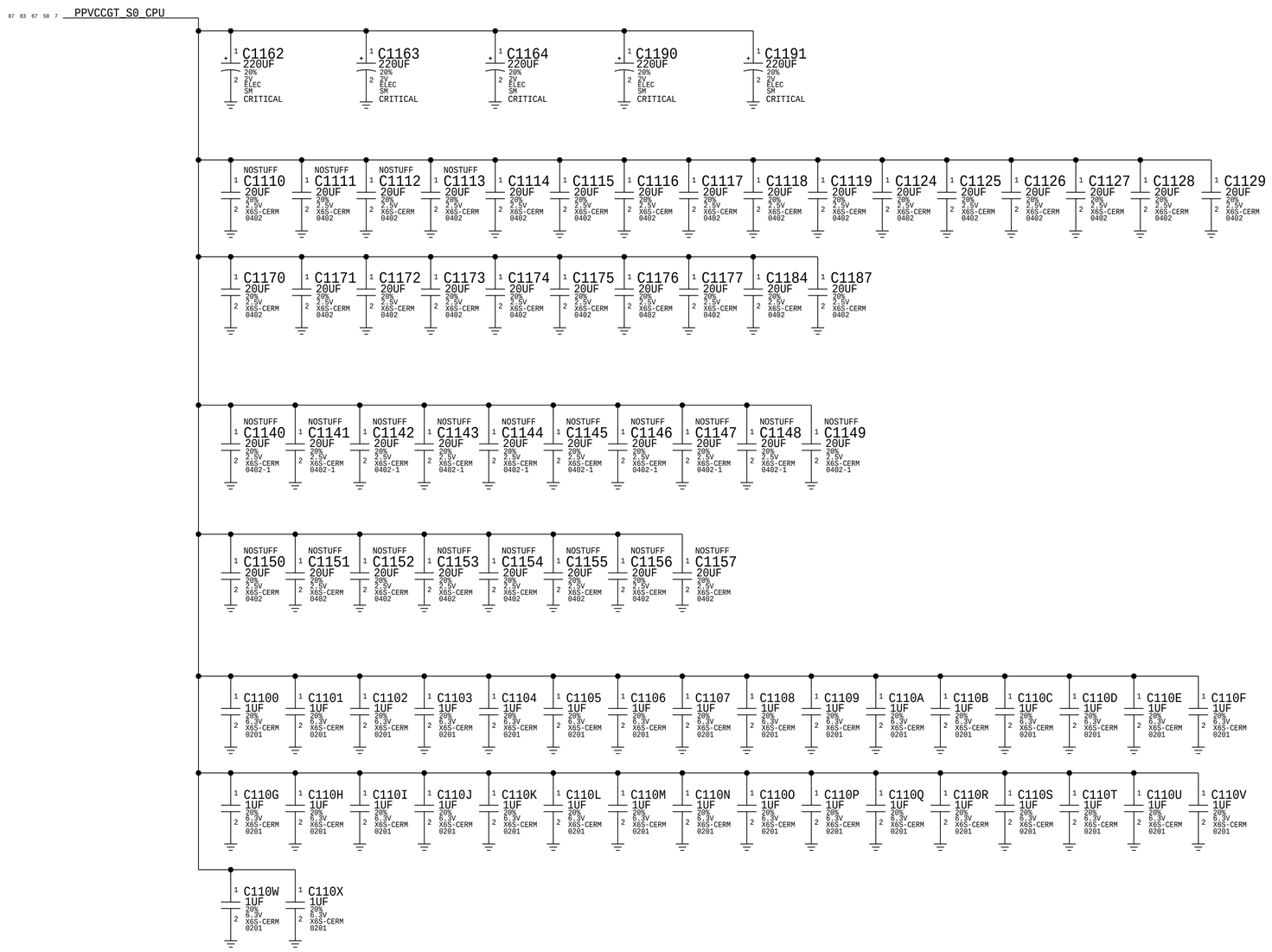

BOM_COST_GROUP=CPU & CHIPSET

PAGE TITLE
CPU GT Decoupling

Apple Inc.

DRAWING NUMBER 051-05309 SIZE D

REVISION 6.0.0

BRANCH pvt

PAGE 11 OF 500

SHEET 10 OF 98

NOTICE OF PROPRIETARY PROPERTY:

THE INFORMATION CONTAINED HEREIN IS THE PROPRIETARY PROPERTY OF APPLE INC.
THE POSESSOR AGREES TO THE FOLLOWING:
I TO MAINTAIN THIS DOCUMENT IN CONFIDENCE
II NOT TO REPRODUCE OR COPY IT
III NOT TO REVEAL OR PUBLISH IT IN WHOLE OR PART
IV ALL RIGHTS RESERVED

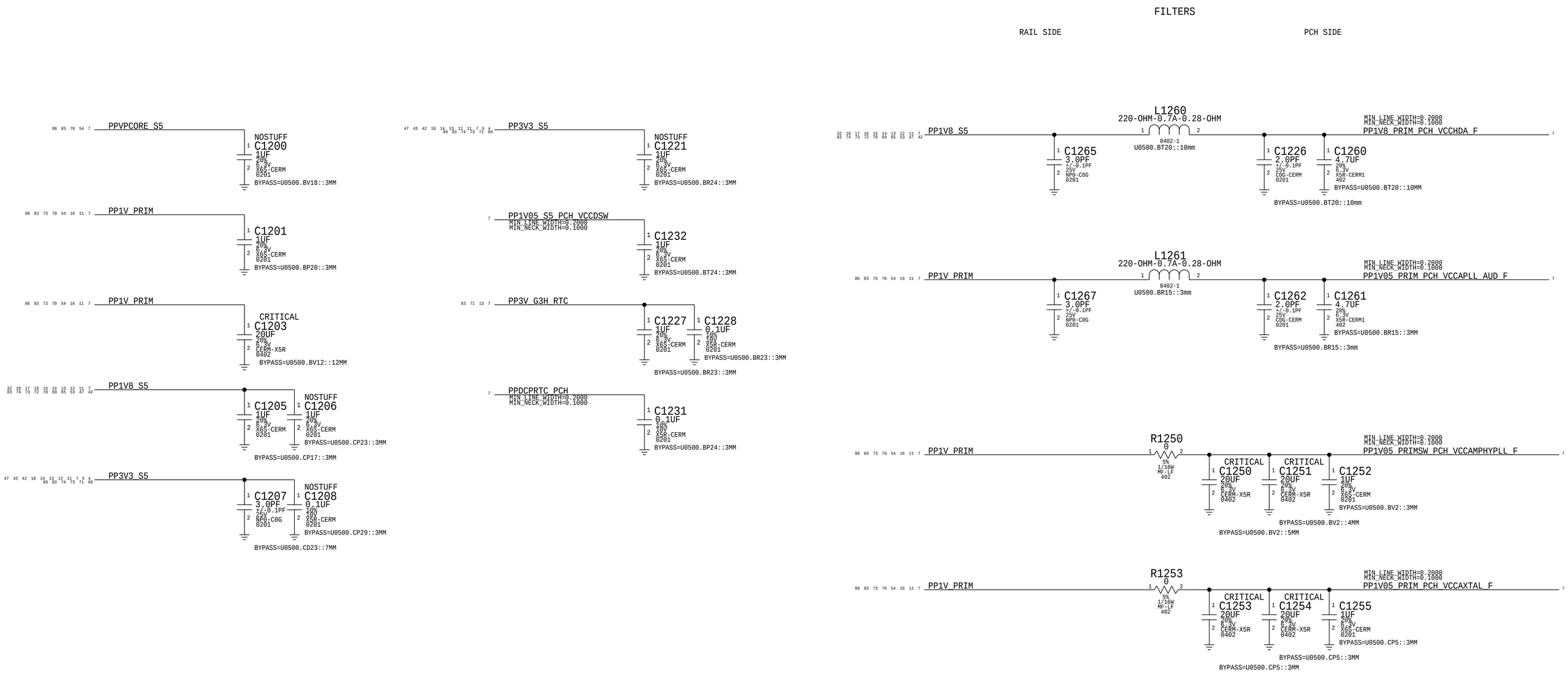

BOM_COST_GROUP=CPU & CHIPSET

PAGE TITLE
PCH Decoupling

Apple Inc.

DRAWING NUMBER 051-05309
SIZE D
REVISION 6.0.0
BRANCH pvt
PAGE 12 OF 500
SHEET 11 OF 98

NOTICE OF PROPRIETARY PROPERTY:
THE INFORMATION CONTAINED HEREIN IS THE PROPRIETARY PROPERTY OF APPLE INC.
THE POSESSOR AGREES TO THE FOLLOWING:
I TO MAINTAIN THIS DOCUMENT IN CONFIDENCE
II NOT TO REPRODUCE OR COPY IT
III NOT TO REVEAL OR PUBLISH IT IN WHOLE OR PART
IV ALL RIGHTS RESERVED

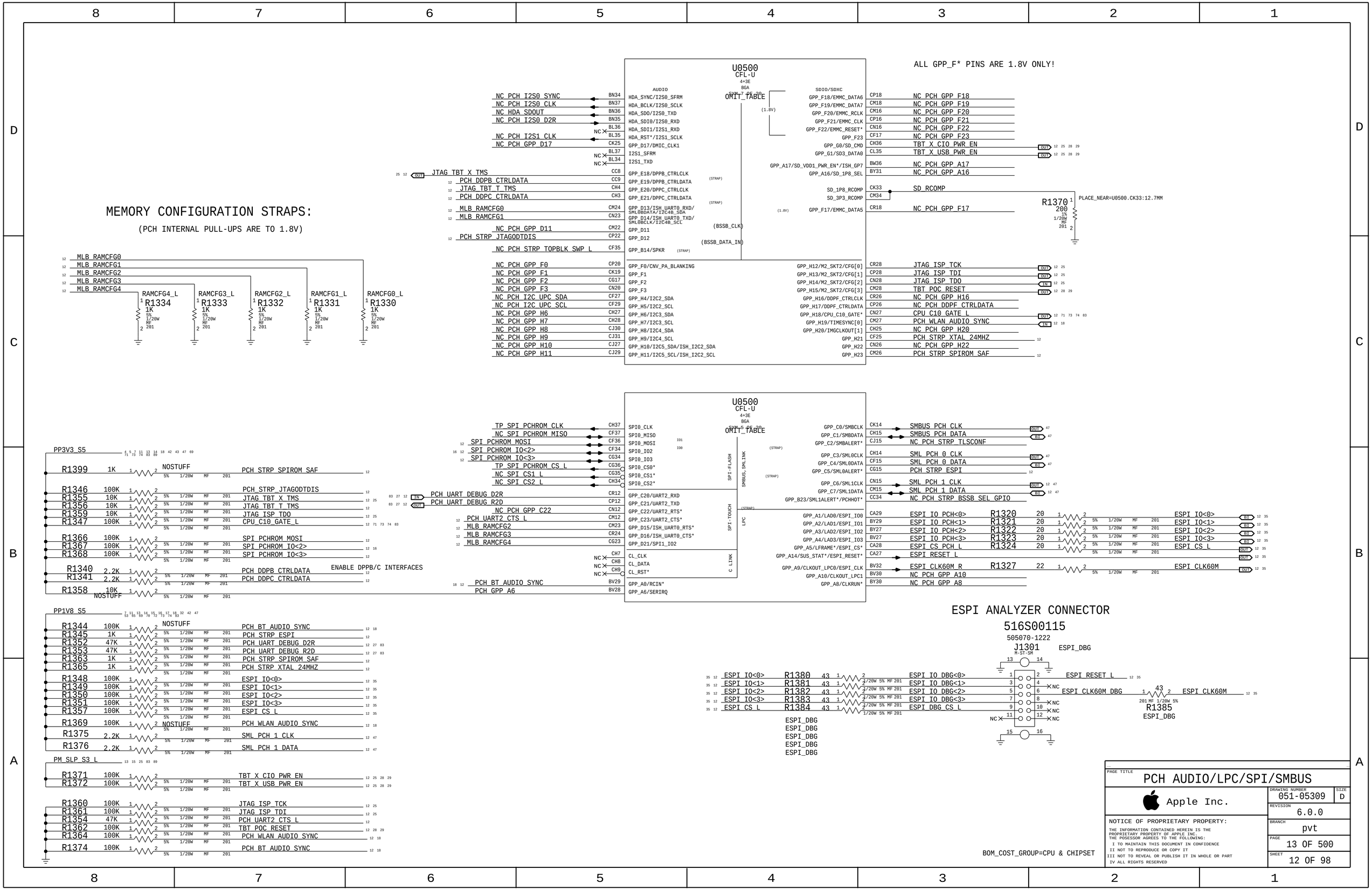
U0500
CFL-U
4+3E
BGA
OMIT_TABLE
ALL GPP_F* PINS ARE 1.8V ONLY!
MEMORY CONFIGURATION STRAPS:
(PCH INTERNAL PULL-UPS ARE TO 1.8V)
NC_PCH_I2S0_SYNC
NC_PCH_I2S0_CLK
NC_HDA_SDOUT
NC_PCH_I2S0_D2R
NC_PCH_I2S1_CLK
NC_PCH_GPP_D17
JTAG_TBT_X_TMS
PCH_DDPB_CTRLDATA
JTAG_TBT_T_TMS
PCH_DDPC_CTRLDATA
MLB_RAMCFG0
MLB_RAMCFG1
NC_PCH_GPP_D11
PCH_STRP_JTAGODTDIS
NC_PCH_STRP_TOPBLK_SWP_L
NC_PCH_GPP_F18
NC_PCH_GPP_F19
NC_PCH_GPP_F20
NC_PCH_GPP_F21
NC_PCH_GPP_F22
NC_PCH_GPP_F23
TBT_X_CIO_PWR_EN
TBT_X_USB_PWR_EN
NC_PCH_GPP_A17
NC_PCH_GPP_A16
SD_RCOMP
NC_PCH_GPP_F17
R1370 200 1% 1/20W MF 201
PLACE_NEAR=U0500.CK33:12.7MM
JTAG_ISP_TCK
JTAG_ISP_TDI
JTAG_ISP_TDO
TBT_POC_RESET
NC_PCH_GPP_H16
NC_PCH_DDPF_CTRLDATA
CPU_C10_GATE_L
PCH_WLAN_AUDIO_SYNC
NC_PCH_GPP_H20
PCH_STRP_XTAL_24MHZ
NC_PCH_GPP_H22
PCH_STRP_SPIROM_SAF
MLB_RAMCFG0
MLB_RAMCFG1
MLB_RAMCFG2
MLB_RAMCFG3
MLB_RAMCFG4
RAMCFG4_L R1334 1K
RAMCFG3_L R1333 1K
RAMCFG2_L R1332 1K
RAMCFG1_L R1331 1K
RAMCFG0_L R1330 1K
TP_SPI_PCHROM_CLK
NC_SPI_PCHROM_MISO
SPI_PCHROM_MOSI
SPI_PCHROM_IO<2>
SPI_PCHROM_IO<3>
TP_SPI_PCHROM_CS_L
NC_SPI_CS1_L
NC_SPI_CS2_L
PCH_UART_DEBUG_D2R
PCH_UART_DEBUG_R2D
NC_PCH_GPP_C22
PCH_UART2_CTS_L
MLB_RAMCFG2
MLB_RAMCFG3
MLB_RAMCFG4
PCH_BT_AUDIO_SYNC
PCH_GPP_A6
SMBUS_PCH_CLK
SMBUS_PCH_DATA
NC_PCH_STRP_TLSCONF
SML_PCH_0_CLK
SML_PCH_0_DATA
PCH_STRP_ESPI
SML_PCH_1_CLK
SML_PCH_1_DATA
NC_PCH_STRP_BSSB_SEL_GPIO
ESPI_IO_PCH<0> R1320 20
ESPI_IO_PCH<1> R1321 20
ESPI_IO_PCH<2> R1322 20
ESPI_IO_PCH<3> R1323 20
ESPI_CS_PCH_L R1324 20
ESPI_RESET_L
ESPI_CLK60M_R R1327 22
NC_PCH_GPP_A10
NC_PCH_GPP_A8
ESPI_IO<0> R1380 43
ESPI_IO<1> R1381 43
ESPI_IO<2> R1382 43
ESPI_IO<3> R1383 43
ESPI_CS_L R1384 43
ESPI_IO_DBG<0>
ESPI_IO_DBG<1>
ESPI_IO_DBG<2>
ESPI_IO_DBG<3>
ESPI_DBG_CS_L
ESPI_DBG
ESPI_RESET_L
ESPI_CLK60M_DBG
ESPI_CLK60M
R1385 43 201 MF 1/20W 5%
ESPI_DBG
ESPI ANALYZER CONNECTOR
516S00115
505070-1222
J1301
M-ST-SM
PP3V3_S5
R1399 1K NOSTUFF
R1346 100K
R1355 10K
R1356 10K
R1359 10K
R1347 100K
R1366 100K
R1367 100K
R1368 100K
R1340 2.2K
R1341 2.2K
R1358 10K NOSTUFF
ENABLE DPPB/C INTERFACES
PP1V8_S5
R1344 100K NOSTUFF
R1345 1K
R1352 47K
R1353 47K
R1363 1K
R1365 1K
R1348 100K
R1349 100K
R1350 100K
R1351 100K
R1357 100K
R1369 100K NOSTUFF
R1375 2.2K
R1376 2.2K
PM_SLP_S3_L
R1371 100K
R1372 100K
R1360 100K
R1361 100K
R1354 47K
R1362 100K
R1364 100K
R1374 100K
BOM_COST_GROUP=CPU & CHIPSET
PAGE TITLE
PCH AUDIO/LPC/SPI/SMBUS
Apple Inc.
DRAWING NUMBER 051-05309
SIZE D
REVISION 6.0.0
BRANCH pvt
PAGE 13 OF 500
SHEET 12 OF 98
NOTICE OF PROPRIETARY PROPERTY:
THE INFORMATION CONTAINED HEREIN IS THE PROPRIETARY PROPERTY OF APPLE INC.
THE POSESSOR AGREES TO THE FOLLOWING:
I TO MAINTAIN THIS DOCUMENT IN CONFIDENCE
II NOT TO REPRODUCE OR COPY IT
III NOT TO REVEAL OR PUBLISH IT IN WHOLE OR PART
IV ALL RIGHTS RESERVED

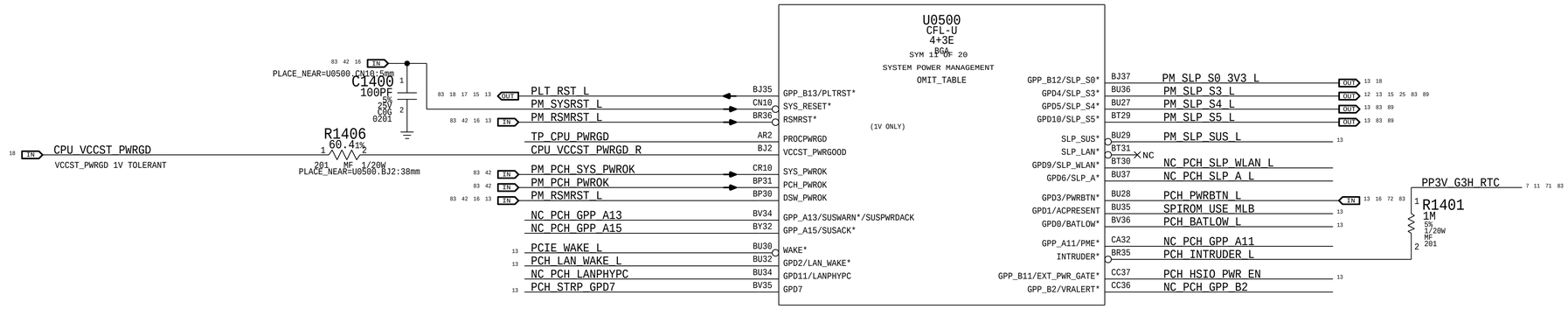

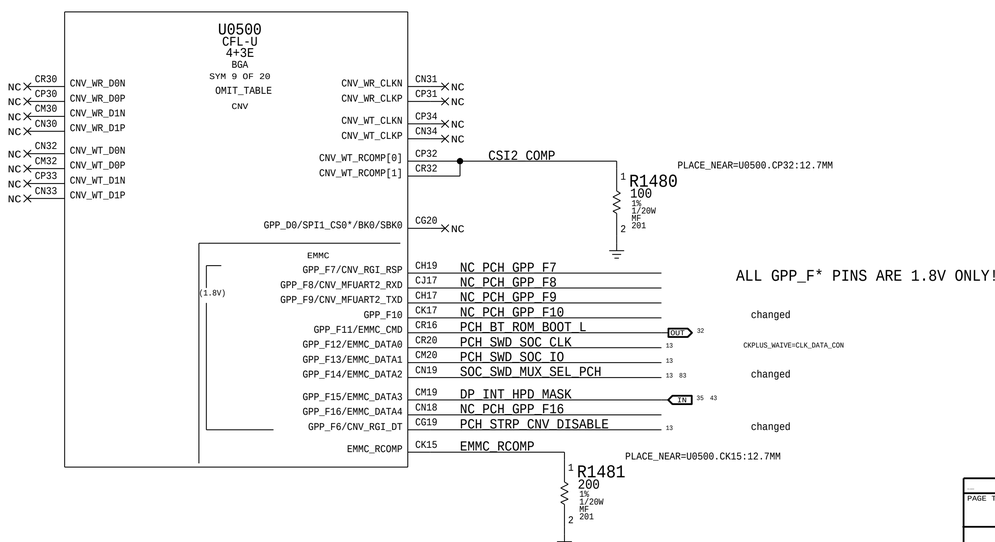

ALL GPP_F* PINS ARE 1.8V ONLY!

changed

CKPLUS_WAIVE=CLK_DATA_CON

changed

changed

PP1V8_S5

R1461	1K	5%	1/20W	MF	201	PCH_STRP_CNV_DISABLE	13	changed
R1446	100K	5%	1/20W	MF	201	PCH_SWD_SOC_CLK	13	
R1445	100K	5%	1/20W	MF	201	PCH_SWD_SOC_IO	13	

PP3V3_S5

R1440	100K	5%	1/20W	MF	201	SPIROM_USE_MLB	13
R1441	100K	5%	1/20W	MF	201	PCH_STRP_GPD7	13
R1451	100K	5%	1/20W	MF	201	PCH_BATLOW_L	13
R1452	10K	5%	1/20W	MF	201	PCIE_WAKE_L	13
R1453	100K	5%	1/20W	MF	201	PCH_LAN_WAKE_L	13
R1459	100K	5%	1/20W	MF	201	PCH_HSIO_PWR_EN	13
R1463	10K	5%	1/20W	MF	201	PCH_PWRBTN_L	13 16 72 83
R1460	100K	5%	1/20W	MF	201	PLT_RST_L	13 15 17 18 83
R1444	100K	5%	1/20W	MF	201	SOC_SWD_MUX_SEL_PCH	13 83
R1454	100K	5%	1/20W	MF	201	PM_SLP_S5_L	13 83 89
R1455	100K	5%	1/20W	MF	201	PM_SLP_S4_L	13 83 89
R1456	100K	5%	1/20W	MF	201	PM_SLP_S3_L	12 13 15 25 83 89
R1457	100K	5%	1/20W	MF	201	PM_SLP_S0_3V3_L	13 18
R1458	100K	5%	1/20W	MF	201	PM_SLP_SUS_L	13

NOTE: =PM_SLP_S0_L HAS INTERNAL PULL-UP BEFORE RSMRST_L IS RELEASED.
THIS CAUSES A VOLTAGE DIVIDER WITH THE PULL-DOWN HERE.
THE SIGNAL IS DRIVEN HI AFTER RSMRST_L IS RELEASED.

BOM_COST_GROUP=CPU & CHIPSET

PAGE TITLE
PCH POWER MANAGEMENT

Apple Inc.

DRAWING NUMBER 051-05309
SIZE D
REVISION 6.0.0
BRANCH pvt
PAGE 14 OF 500
SHEET 13 OF 98

NOTICE OF PROPRIETARY PROPERTY:
THE INFORMATION CONTAINED HEREIN IS THE PROPRIETARY PROPERTY OF APPLE INC.
THE POSESSOR AGREES TO THE FOLLOWING:
I TO MAINTAIN THIS DOCUMENT IN CONFIDENCE
II NOT TO REPRODUCE OR COPY IT
III NOT TO REVEAL OR PUBLISH IT IN WHOLE OR PART
IV ALL RIGHTS RESERVED

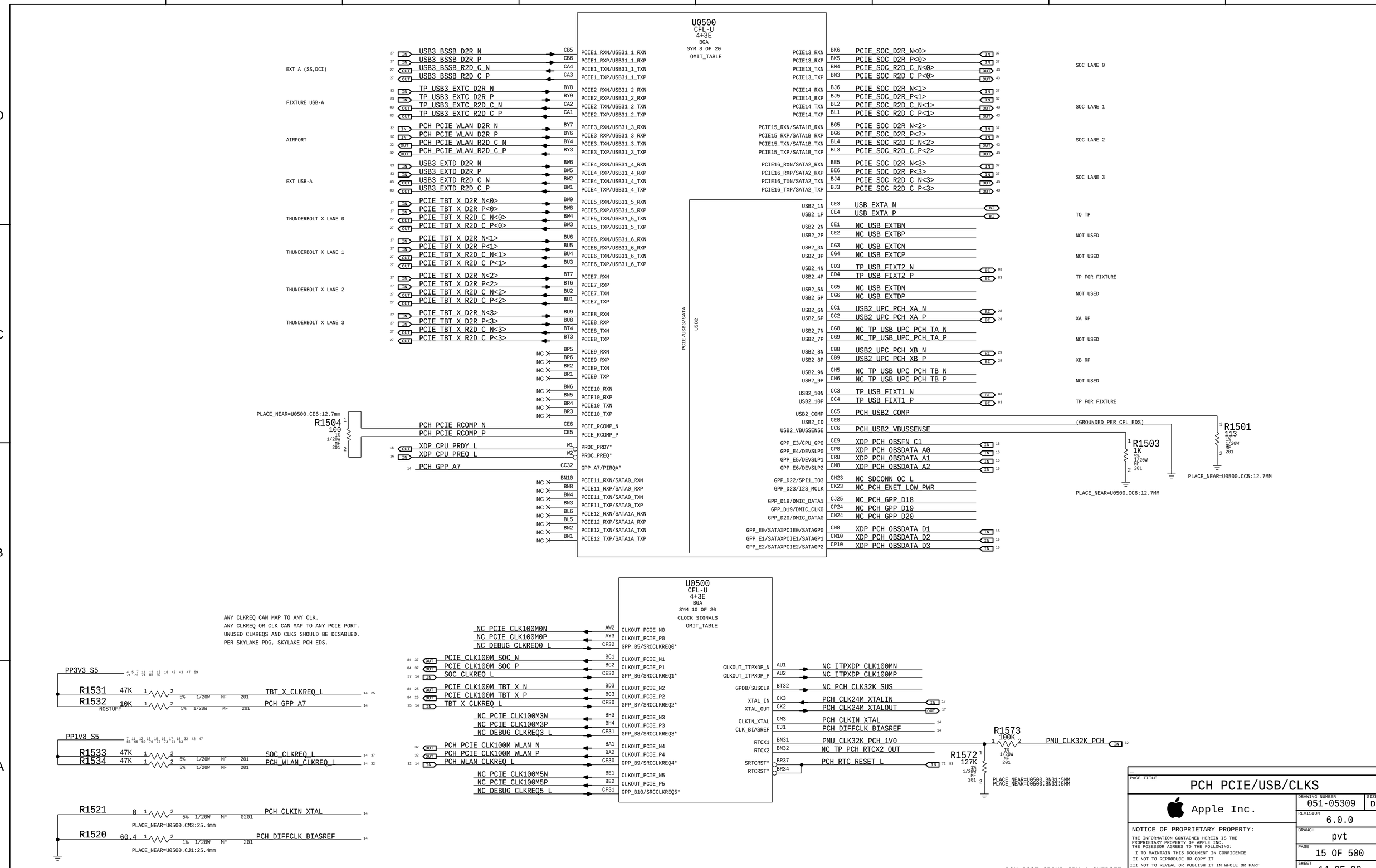
U0500
CFL-U
4+3E
BGA
SYM 8 OF 20
OMIT_TABLE
EXT A (SS,DCI)
USB3_BSSB_D2R_N
USB3_BSSB_D2R_P
USB3_BSSB_R2D_C_N
USB3_BSSB_R2D_C_P
FIXTURE USB-A
TP_USB3_EXTC_D2R_N
TP_USB3_EXTC_D2R_P
TP_USB3_EXTC_R2D_C_N
TP_USB3_EXTC_R2D_C_P
AIRPORT
PCH_PCIE_WLAN_D2R_N
PCH_PCIE_WLAN_D2R_P
PCH_PCIE_WLAN_R2D_C_N
PCH_PCIE_WLAN_R2D_C_P
EXT USB-A
USB3_EXTD_D2R_N
USB3_EXTD_D2R_P
USB3_EXTD_R2D_C_N
USB3_EXTD_R2D_C_P
THUNDERBOLT X LANE 0
PCIE_TBT_X_D2R_N<0>
PCIE_TBT_X_D2R_P<0>
PCIE_TBT_X_R2D_C_N<0>
PCIE_TBT_X_R2D_C_P<0>
THUNDERBOLT X LANE 1
PCIE_TBT_X_D2R_N<1>
PCIE_TBT_X_D2R_P<1>
PCIE_TBT_X_R2D_C_N<1>
PCIE_TBT_X_R2D_C_P<1>
THUNDERBOLT X LANE 2
PCIE_TBT_X_D2R_N<2>
PCIE_TBT_X_D2R_P<2>
PCIE_TBT_X_R2D_C_N<2>
PCIE_TBT_X_R2D_C_P<2>
THUNDERBOLT X LANE 3
PCIE_TBT_X_D2R_N<3>
PCIE_TBT_X_D2R_P<3>
PCIE_TBT_X_R2D_C_N<3>
PCIE_TBT_X_R2D_C_P<3>
PCIE_SOC_D2R_N<0>
PCIE_SOC_D2R_P<0>
PCIE_SOC_R2D_C_N<0>
PCIE_SOC_R2D_C_P<0>
SOC LANE 0
PCIE_SOC_D2R_N<1>
PCIE_SOC_D2R_P<1>
PCIE_SOC_R2D_C_N<1>
PCIE_SOC_R2D_C_P<1>
SOC LANE 1
PCIE_SOC_D2R_N<2>
PCIE_SOC_D2R_P<2>
PCIE_SOC_R2D_C_N<2>
PCIE_SOC_R2D_C_P<2>
SOC LANE 2
PCIE_SOC_D2R_N<3>
PCIE_SOC_D2R_P<3>
PCIE_SOC_R2D_C_N<3>
PCIE_SOC_R2D_C_P<3>
SOC LANE 3
USB_EXTA_N
USB_EXTA_P
TO TP
NC_USB_EXTBN
NC_USB_EXTBP
NOT USED
NC_USB_EXTCN
NC_USB_EXTCP
NOT USED
TP_USB_FIXT2_N
TP_USB_FIXT2_P
TP FOR FIXTURE
NC_USB_EXTDN
NC_USB_EXTDP
NOT USED
USB2_UPC_PCH_XA_N
USB2_UPC_PCH_XA_P
XA RP
NC_TP_USB_UPC_PCH_TA_N
NC_TP_USB_UPC_PCH_TA_P
NOT USED
USB2_UPC_PCH_XB_N
USB2_UPC_PCH_XB_P
XB RP
NC_TP_USB_UPC_PCH_TB_N
NC_TP_USB_UPC_PCH_TB_P
NOT USED
TP_USB_FIXT1_N
TP_USB_FIXT1_P
TP FOR FIXTURE
PCH_USB2_COMP
(GROUNDED PER CFL EDS)
PCH_USB2_VBUSSENSE
XDP_PCH_OBSFN_C1
XDP_PCH_OBSDATA_A0
XDP_PCH_OBSDATA_A1
XDP_PCH_OBSDATA_A2
NC_SDCONN_OC_L
NC_PCH_ENET_LOW_PWR
NC_PCH_GPP_D18
NC_PCH_GPP_D19
NC_PCH_GPP_D20
XDP_PCH_OBSDATA_D1
XDP_PCH_OBSDATA_D2
XDP_PCH_OBSDATA_D3
R1501
113
1%
1/20W
MF
201
PLACE_NEAR=U0500.CC5:12.7MM
R1503
1K
5%
1/20W
MF
201
PLACE_NEAR=U0500.CC6:12.7MM
PLACE_NEAR=U0500.CE6:12.7mm
R1504
100
1%
1/20W
MF
201
PCH_PCIE_RCOMP_N
PCH_PCIE_RCOMP_P
XDP_CPU_PRDY_L
XDP_CPU_PREQ_L
PCH_GPP_A7
NC PCIE_CLK100M0N
NC PCIE_CLK100M0P
NC DEBUG_CLKREQ0_L
PCIE_CLK100M_SOC_N
PCIE_CLK100M_SOC_P
SOC_CLKREQ_L
PCIE_CLK100M_TBT_X_N
PCIE_CLK100M_TBT_X_P
TBT_X_CLKREQ_L
NC PCIE_CLK100M3N
NC PCIE_CLK100M3P
NC DEBUG_CLKREQ3_L
PCH_PCIE_CLK100M_WLAN_N
PCH_PCIE_CLK100M_WLAN_P
PCH_WLAN_CLKREQ_L
NC PCIE_CLK100M5N
NC PCIE_CLK100M5P
NC DEBUG_CLKREQ5_L
ANY CLKREQ CAN MAP TO ANY CLK.
ANY CLKREQ OR CLK CAN MAP TO ANY PCIE PORT.
UNUSED CLKREQS AND CLKS SHOULD BE DISABLED.
PER SKYLAKE PDG, SKYLAKE PCH EDS.
PP3V3_S5
R1531
47K
R1532
10K
NOSTUFF
TBT_X_CLKREQ_L
PCH_GPP_A7
PP1V8_S5
R1533
47K
R1534
47K
SOC_CLKREQ_L
PCH_WLAN_CLKREQ_L
R1521
0
PCH_CLKIN_XTAL
PLACE_NEAR=U0500.CM3:25.4mm
R1520
60.4
PCH_DIFFCLK_BIASREF
PLACE_NEAR=U0500.CJ1:25.4mm
U0500
CFL-U
4+3E
BGA
SYM 10 OF 20
CLOCK SIGNALS
OMIT_TABLE
NC_ITPXDP_CLK100MN
NC_ITPXDP_CLK100MP
NC_PCH_CLK32K_SUS
PCH_CLK24M_XTALIN
PCH_CLK24M_XTALOUT
PCH_CLKIN_XTAL
PCH_DIFFCLK_BIASREF
PMU_CLK32K_PCH_1V0
NC_TP_PCH_RTCX2_OUT
PCH_RTC_RESET_L
R1573
100K
1%
1/20W
MF
201
PMU_CLK32K_PCH
R1572
127K
1%
1/20W
MF
201
PLACE_NEAR=U0500.BN31:5MM
PLACE_NEAR=U0500.BN31:5MM
BOM_COST_GROUP=CPU & CHIPSET
PAGE TITLE
PCH PCIE/USB/CLKS
Apple Inc.
DRAWING NUMBER
051-05309
SIZE
D
REVISION
6.0.0
BRANCH
pvt
PAGE
15 OF 500
SHEET
14 OF 98
NOTICE OF PROPRIETARY PROPERTY:
THE INFORMATION CONTAINED HEREIN IS THE PROPRIETARY PROPERTY OF APPLE INC.
THE POSESSOR AGREES TO THE FOLLOWING:
I TO MAINTAIN THIS DOCUMENT IN CONFIDENCE
II NOT TO REPRODUCE OR COPY IT
III NOT TO REVEAL OR PUBLISH IT IN WHOLE OR PART
IV ALL RIGHTS RESERVED

ALL GPP_F* PINS ARE 1.8V ONLY!

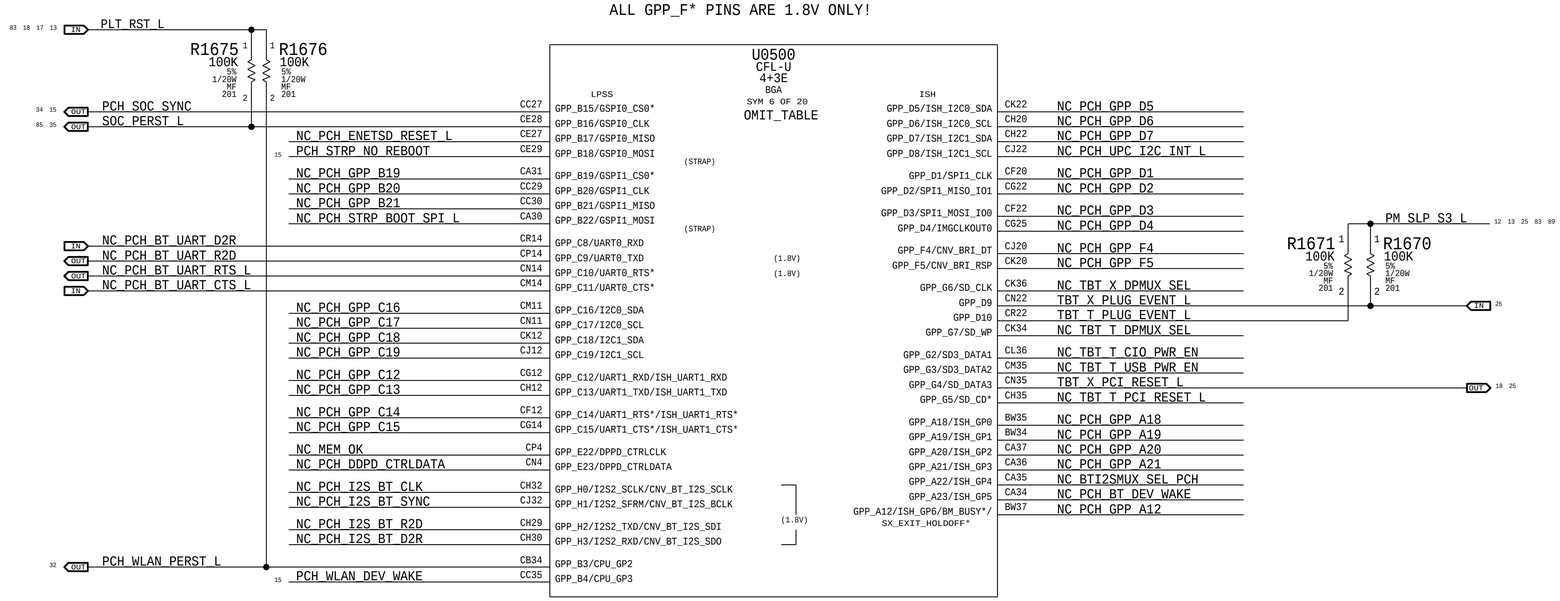

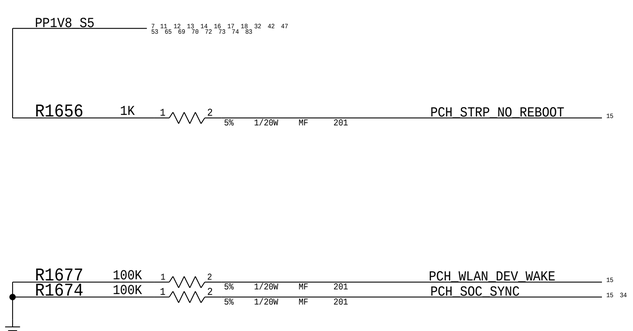

BOM_COST_GROUP=CPU & CHIPSET

PAGE TITLE
PCH SPI/UART/GPIO

Apple Inc.

DRAWING NUMBER 051-05309 SIZE D
REVISION 6.0.0
BRANCH pvt
PAGE 16 OF 500
SHEET 15 OF 98

NOTICE OF PROPRIETARY PROPERTY:
THE INFORMATION CONTAINED HEREIN IS THE PROPRIETARY PROPERTY OF APPLE INC.
THE POSESSOR AGREES TO THE FOLLOWING:
I TO MAINTAIN THIS DOCUMENT IN CONFIDENCE
II NOT TO REPRODUCE OR COPY IT
III NOT TO REVEAL OR PUBLISH IT IN WHOLE OR PART
IV ALL RIGHTS RESERVED

Primary / Merged (CPU/PCH) Micro2-XDP

NOTE: This is not the standard XDP pinout.
Use with 921-0133 Adapter Flex to
support chipset debug.

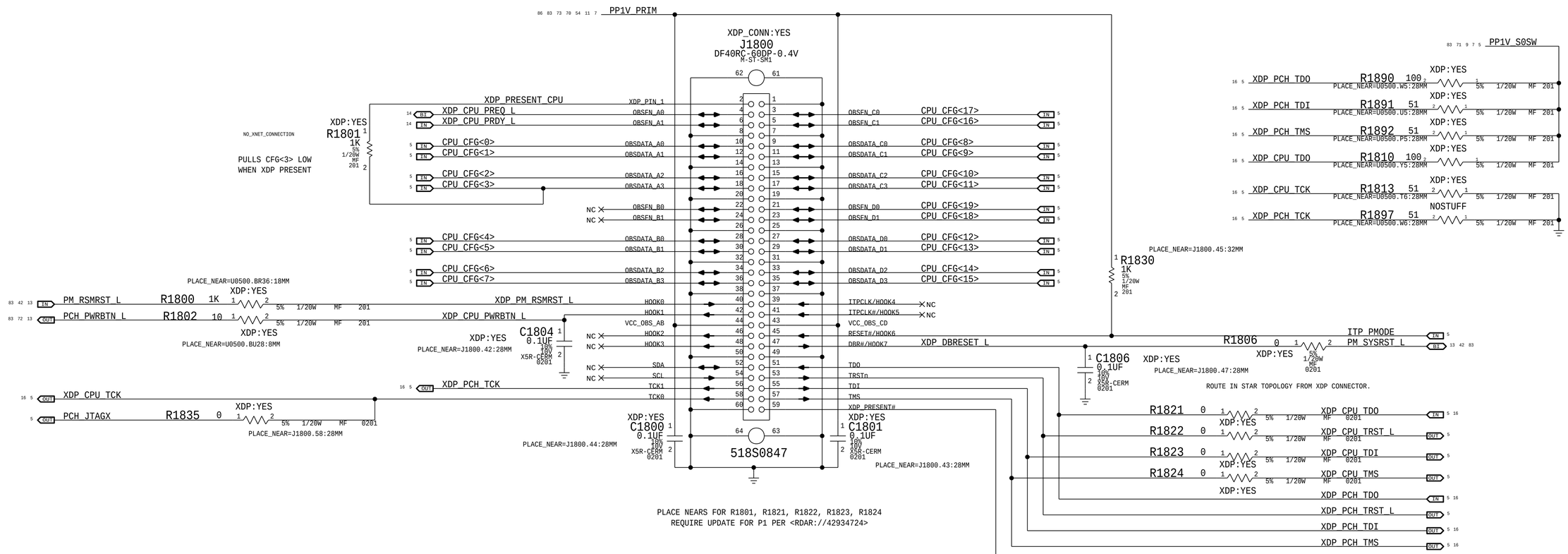

PLACE NEARS FOR R1801, R1821, R1822, R1823, R1824
REQUIRE UPDATE FOR P1 PER <RDAR://42934724>

PCH XDP Signals

These signals do not connect to the Primary (Merged) XDP connector in this architecture.
The PDG puts them on a secondary XDP connector that is only needed in some PCH debugging situation.
They are listed here to show their secondary XDP functions and to provide test points for signals that are not used elsewhere.

PCH/XDP Signals		Non-XDP Signals
XDP_PCH_OBSDATA_A0	TP1868	
XDP_PCH_OBSDATA_A1	TP1869	
XDP_PCH_OBSDATA_A2	TP1870	
XDP_PCH_OBSDATA_A3	TP1871	
XDP_PCH_OBSDATA_B0	TP1872	
XDP_PCH_OBSDATA_D1	TP1878	
XDP_PCH_OBSDATA_D2	TP1879	
XDP_PCH_OBSDATA_D3	TP1880	
XDP_PCH_OBSFN_C1	TP1881	

Unused GPIOs have TPs.

BOM_COST_GROUP=DEBUG

PAGE TITLE	CPU/PCH Merged XDP
Apple Inc.	DRAWING NUMBER 051-05309 SIZE D
	REVISION 6.0.0
	BRANCH pvt
	PAGE 18 OF 500
	SHEET 16 OF 98

NOTICE OF PROPRIETARY PROPERTY:
THE INFORMATION CONTAINED HEREIN IS THE PROPRIETARY PROPERTY OF APPLE INC.
THE POSESSOR AGREES TO THE FOLLOWING:
I TO MAINTAIN THIS DOCUMENT IN CONFIDENCE
II NOT TO REPRODUCE OR COPY IT
III NOT TO REVEAL OR PUBLISH IT IN WHOLE OR PART
IV ALL RIGHTS RESERVED

24MHz CLOCK

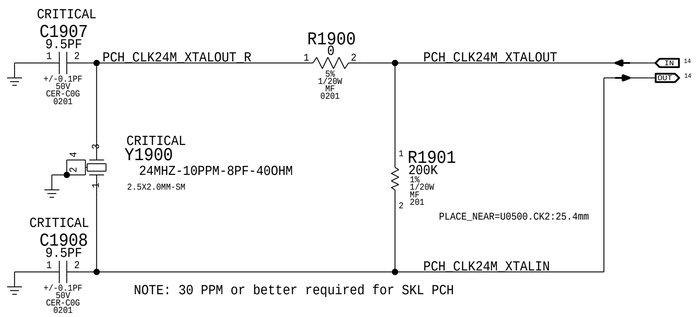

THRMTRIP# ISOLATION & LEVEL-SHIFT TO 1V8

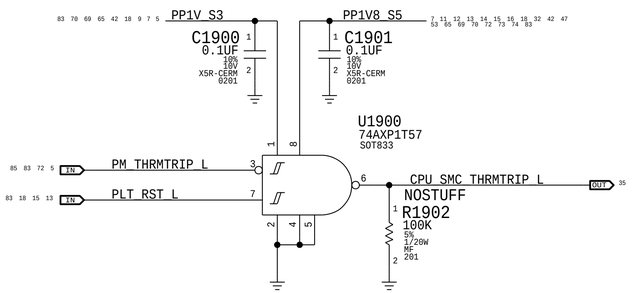

BOM_COST_GROUP=CPU & CHIPSET

PAGE TITLE

Chipset Support 1

Apple Inc.

DRAWING NUMBER 051-05309

SIZE D

REVISION 6.0.0

BRANCH pvt

PAGE 19 OF 500

SHEET 17 OF 98

NOTICE OF PROPRIETARY PROPERTY:

THE INFORMATION CONTAINED HEREIN IS THE PROPRIETARY PROPERTY OF APPLE INC.
THE POSESSOR AGREES TO THE FOLLOWING:

I TO MAINTAIN THIS DOCUMENT IN CONFIDENCE
II NOT TO REPRODUCE OR COPY IT
III NOT TO REVEAL OR PUBLISH IT IN WHOLE OR PART
IV ALL RIGHTS RESERVED

PLATFORM RESET LEVEL-SHIFTER TO 3V3

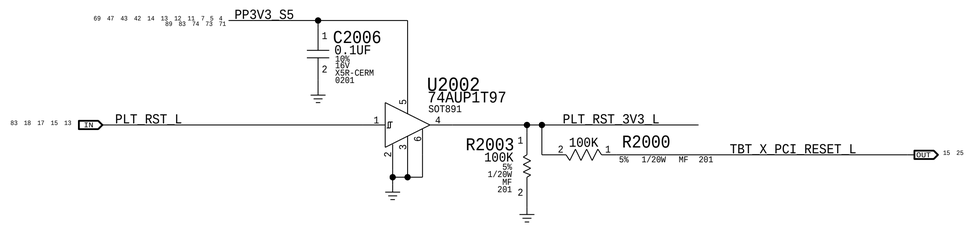

SLP_S0# LEVEL SHIFTER TO 1V8

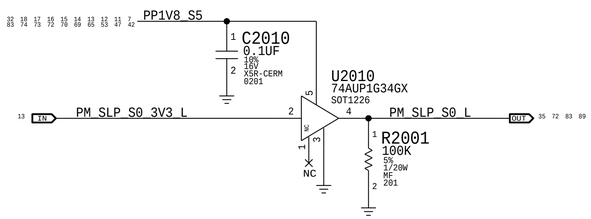

ALL_SYS_PWRGD QUALIFIER & VCCST_PWRGD LEVEL SHIFTER TO 1V

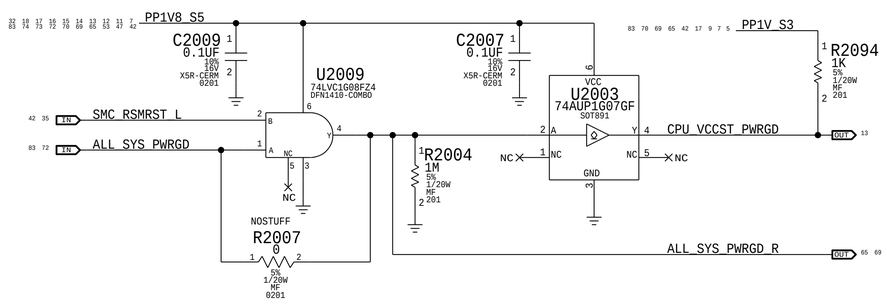

TPs for Chipset Debug Pins

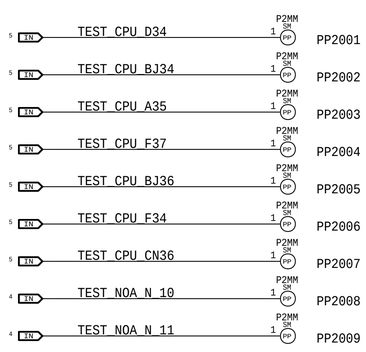

BT AUDIO SYNC BUFFER

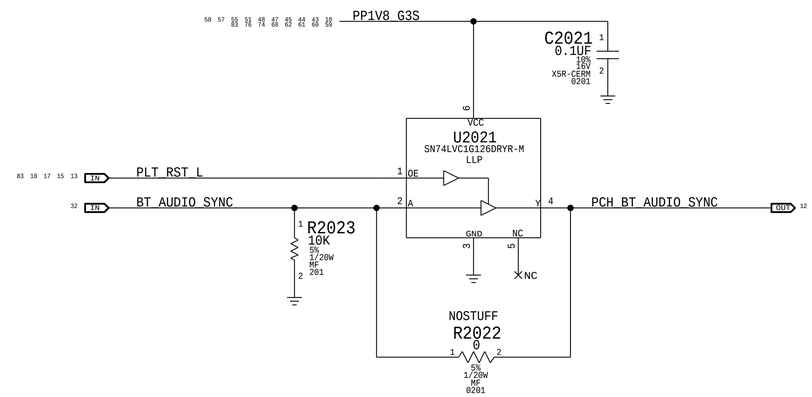

WLAN AUDIO SYNC BUFFER

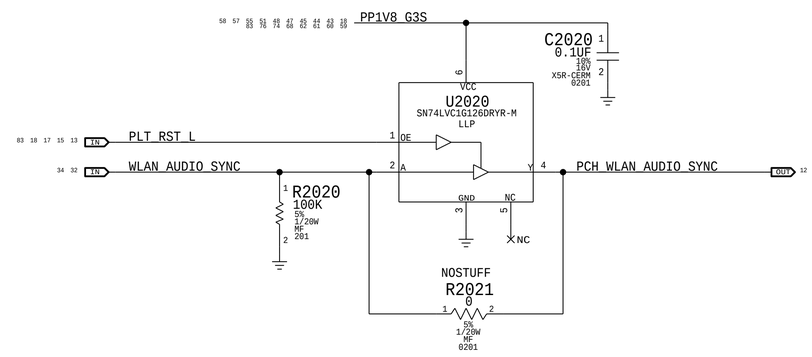

BOM_COST_GROUP=CPU & CHIPSET

PAGE TITLE	CHIPSET SUPPORT 2
Apple Inc.	DRAWING NUMBER 051-05309
	SIZE D
	REVISION 6.0.0
	BRANCH pvt
	PAGE 20 OF 500
	SHEET 18 OF 98

NOTICE OF PROPRIETARY PROPERTY:
THE INFORMATION CONTAINED HEREIN IS THE PROPRIETARY PROPERTY OF APPLE INC.
THE POSESSOR AGREES TO THE FOLLOWING:
I TO MAINTAIN THIS DOCUMENT IN CONFIDENCE
II NOT TO REPRODUCE OR COPY IT
III NOT TO REVEAL OR PUBLISH IT IN WHOLE OR PART
IV ALL RIGHTS RESERVED

CPU-Based Margining

VRef Dividers

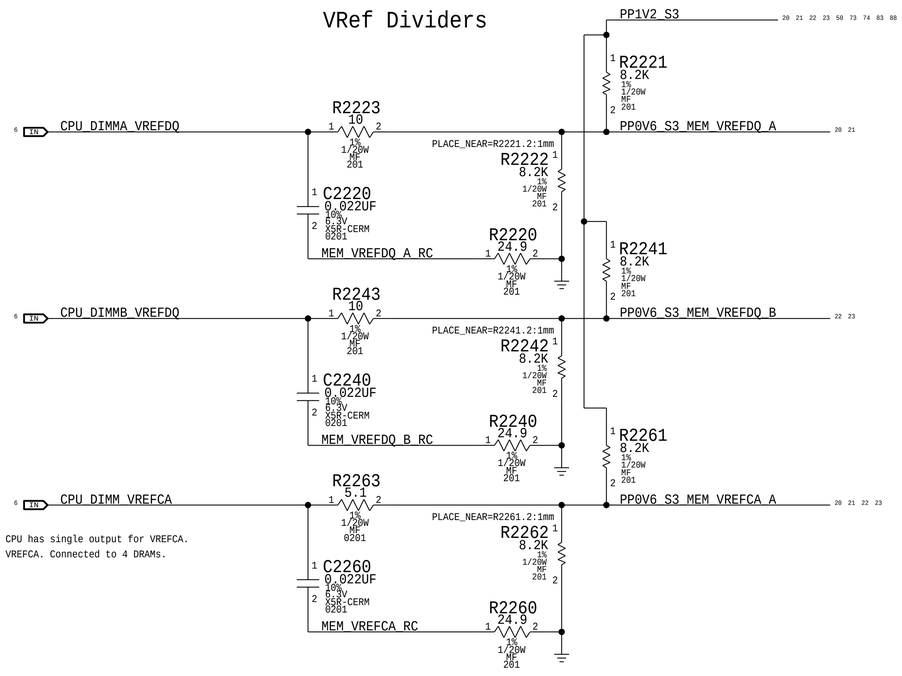

NOTE: CPU has single output for VREFCA.
VREFCA. Connected to 4 DRAMs.

BOM_COST_GROUP=CPU & CHIPSET

SYNC_MASTER: SYNC_DATE:

PAGE TITLE
LPDDR3 VREF MARGINING

Apple Inc.

DRAWING NUMBER 051-05309
SIZE D
REVISION 6.0.0
BRANCH pvt
PAGE 22 OF 500
SHEET 19 OF 98

NOTICE OF PROPRIETARY PROPERTY:
THE INFORMATION CONTAINED HEREIN IS THE PROPRIETARY PROPERTY OF APPLE INC.
THE POSESSOR AGREES TO THE FOLLOWING:
I TO MAINTAIN THIS DOCUMENT IN CONFIDENCE
II NOT TO REPRODUCE OR COPY IT
III NOT TO REVEAL OR PUBLISH IT IN WHOLE OR PART
IV ALL RIGHTS RESERVED

LPDDR3 CHANNEL A (0-31)

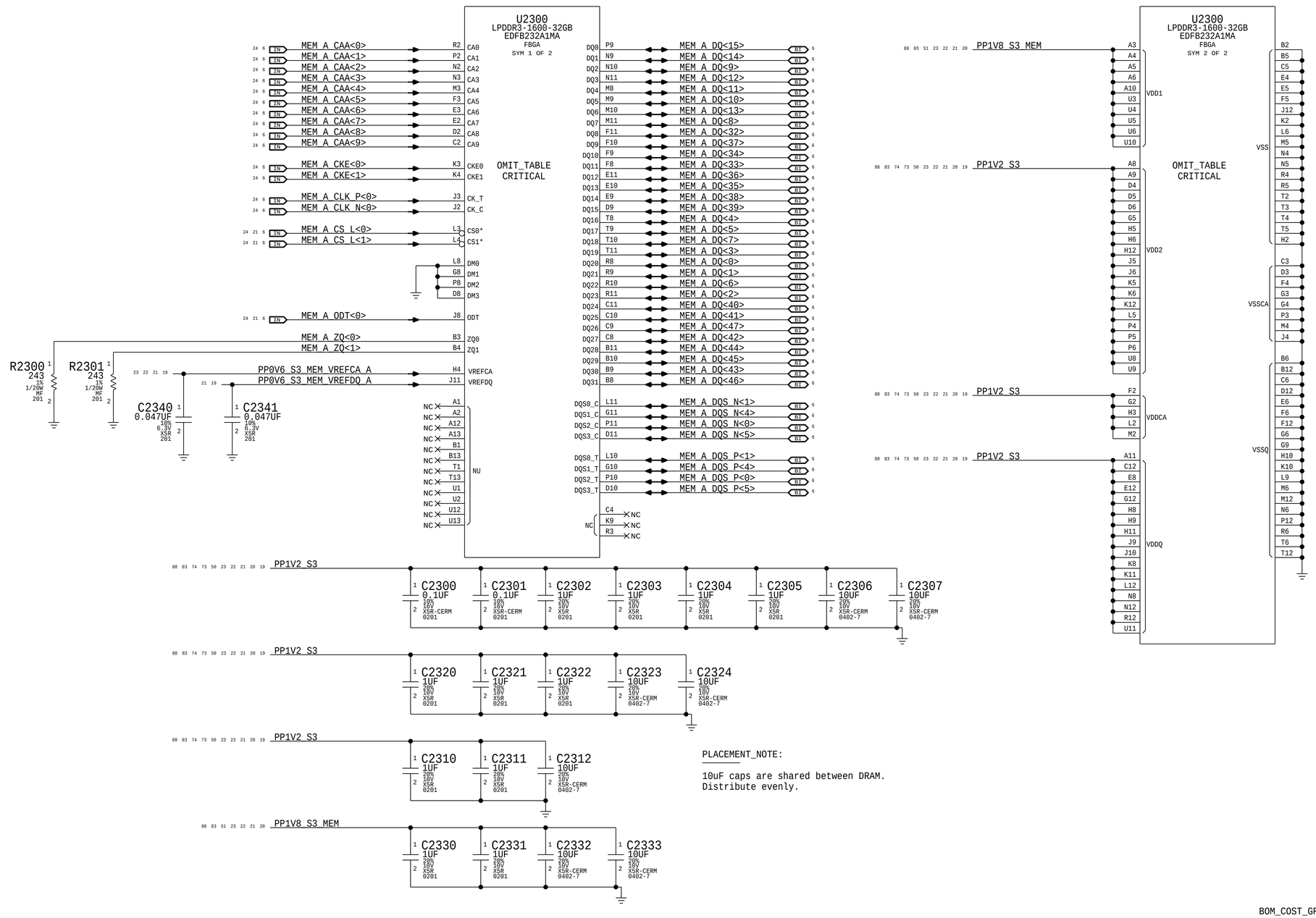

PLACEMENT_NOTE:

10uF caps are shared between DRAM.
Distribute evenly.

BOM_COST_GROUP=DRAM

SYNC_MASTER= SYNC_DATE=

PAGE TITLE
LPDDR3 DRAM Channel A (00-31)

Apple Inc.

NOTICE OF PROPRIETARY PROPERTY:
THE INFORMATION CONTAINED HEREIN IS THE PROPRIETARY PROPERTY OF APPLE INC.
THE POSESSOR AGREES TO THE FOLLOWING:
I TO MAINTAIN THIS DOCUMENT IN CONFIDENCE
II NOT TO REPRODUCE OR COPY IT
III NOT TO REVEAL OR PUBLISH IT IN WHOLE OR PART
IV ALL RIGHTS RESERVED

DRAWING NUMBER	051-05309
SIZE	D
REVISION	6.0.0
BRANCH	pvt
PAGE	23 OF 500
SHEET	20 OF 98

LPDDR3 CHANNEL A (32-63)

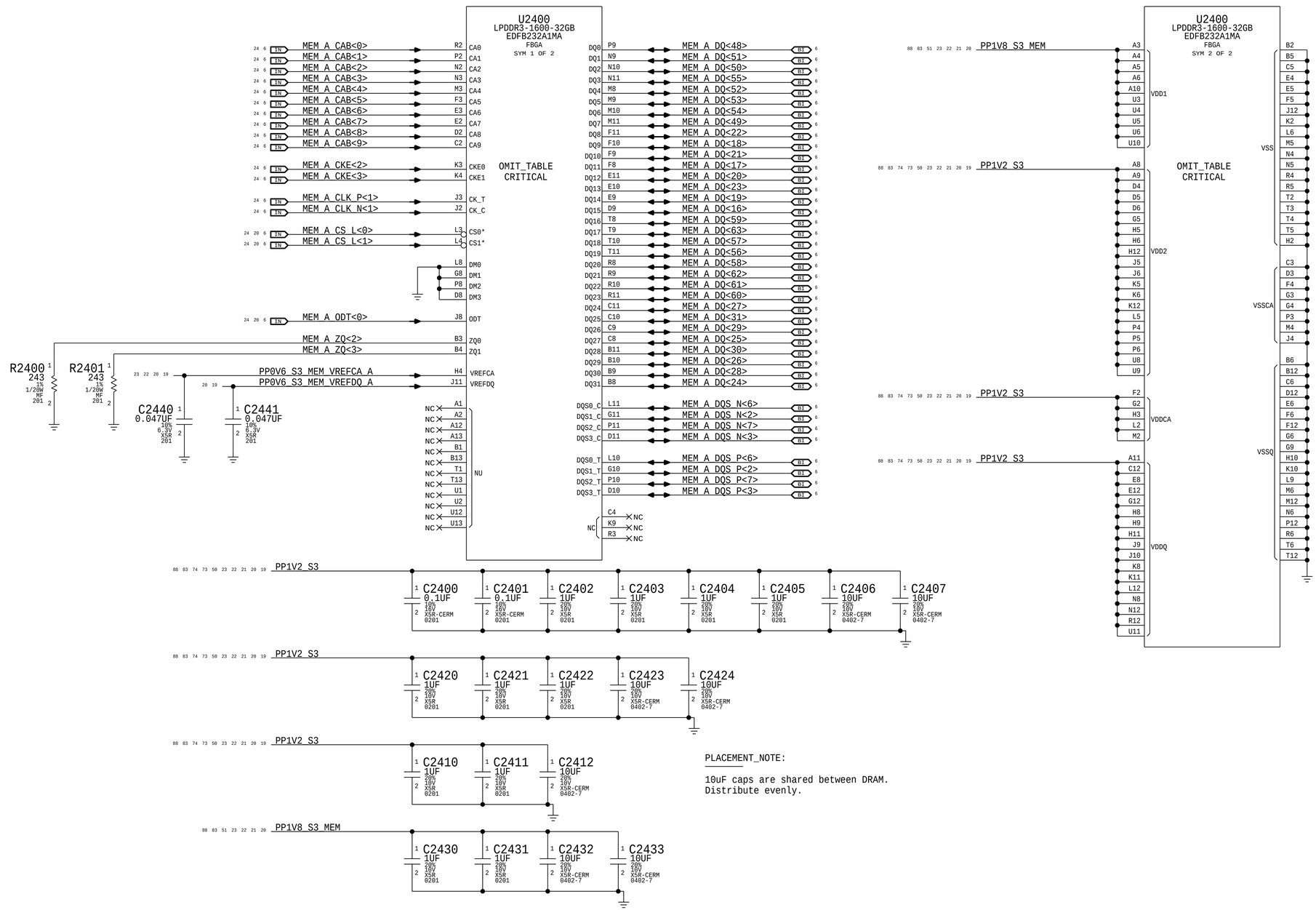

PLACEMENT_NOTE:

10uF caps are shared between DRAM.
Distribute evenly.

BOM_COST_GROUP=DRAM

SYNC_MASTER= SYNC_DATE=

PAGE TITLE
LPDDR3 DRAM Channel A (32-63)

Apple Inc.

NOTICE OF PROPRIETARY PROPERTY:
THE INFORMATION CONTAINED HEREIN IS THE PROPRIETARY PROPERTY OF APPLE INC.
THE POSESSOR AGREES TO THE FOLLOWING:
I TO MAINTAIN THIS DOCUMENT IN CONFIDENCE
II NOT TO REPRODUCE OR COPY IT
III NOT TO REVEAL OR PUBLISH IT IN WHOLE OR PART
IV ALL RIGHTS RESERVED

DRAWING NUMBER	051-05309
SIZE	D
REVISION	6.0.0
BRANCH	pvt
PAGE	24 OF 500
SHEET	21 OF 98

LPDDR3 CHANNEL B (0-31)

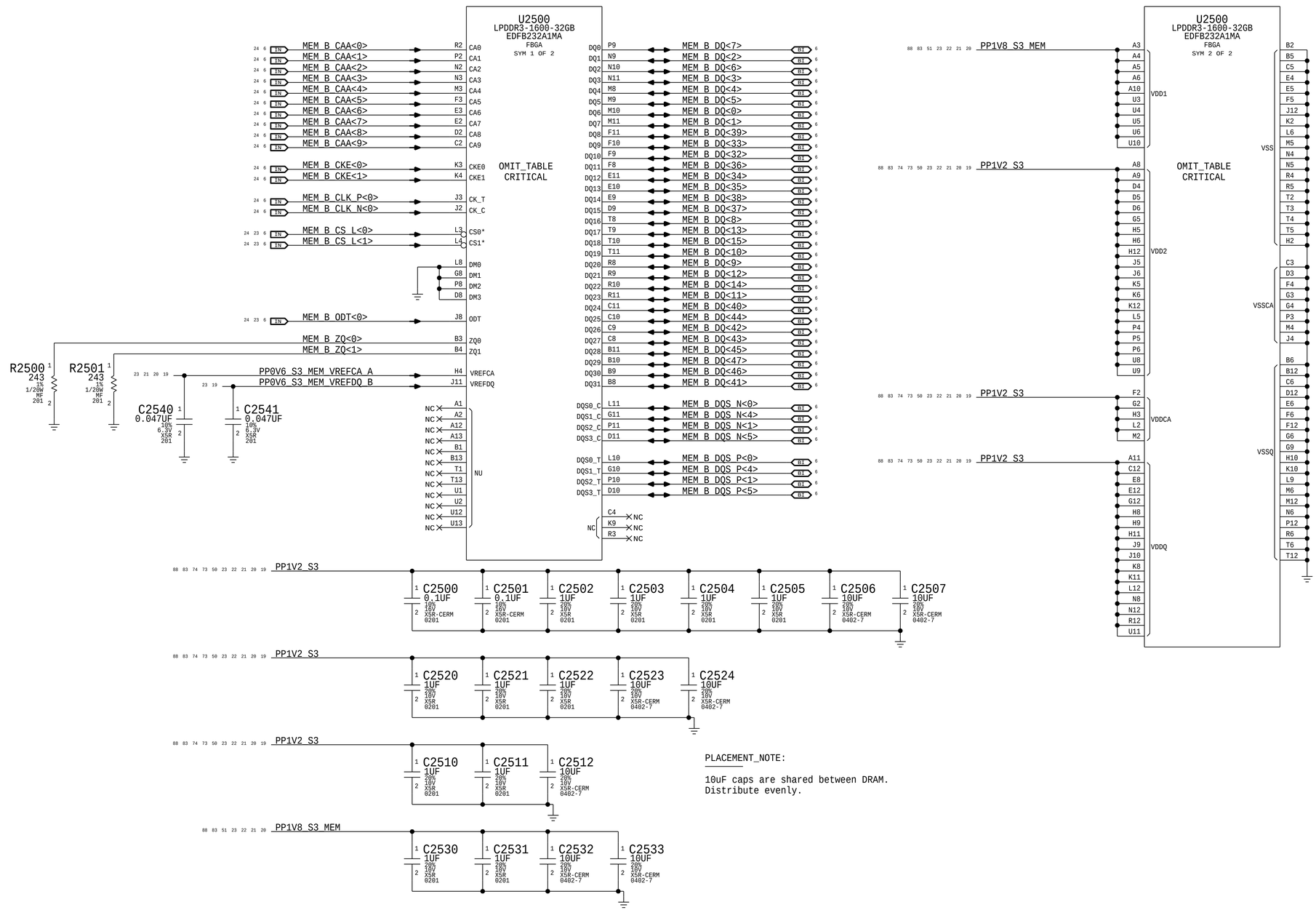

PLACEMENT_NOTE:

10uF caps are shared between DRAM.
Distribute evenly.

BOM_COST_GROUP=DRAM

SYNC_MASTER= SYNC_DATE=

PAGE TITLE
LPDDR3 DRAM Channel B (00-31)

Apple Inc.

NOTICE OF PROPRIETARY PROPERTY:
THE INFORMATION CONTAINED HEREIN IS THE PROPRIETARY PROPERTY OF APPLE INC.
THE POSESSOR AGREES TO THE FOLLOWING:
I TO MAINTAIN THIS DOCUMENT IN CONFIDENCE
II NOT TO REPRODUCE OR COPY IT
III NOT TO REVEAL OR PUBLISH IT IN WHOLE OR PART
IV ALL RIGHTS RESERVED

DRAWING NUMBER	051-05309
SIZE	D
REVISION	6.0.0
BRANCH	pvt
PAGE	25 OF 500
SHEET	22 OF 98

LPDDR3 CHANNEL B (32-63)

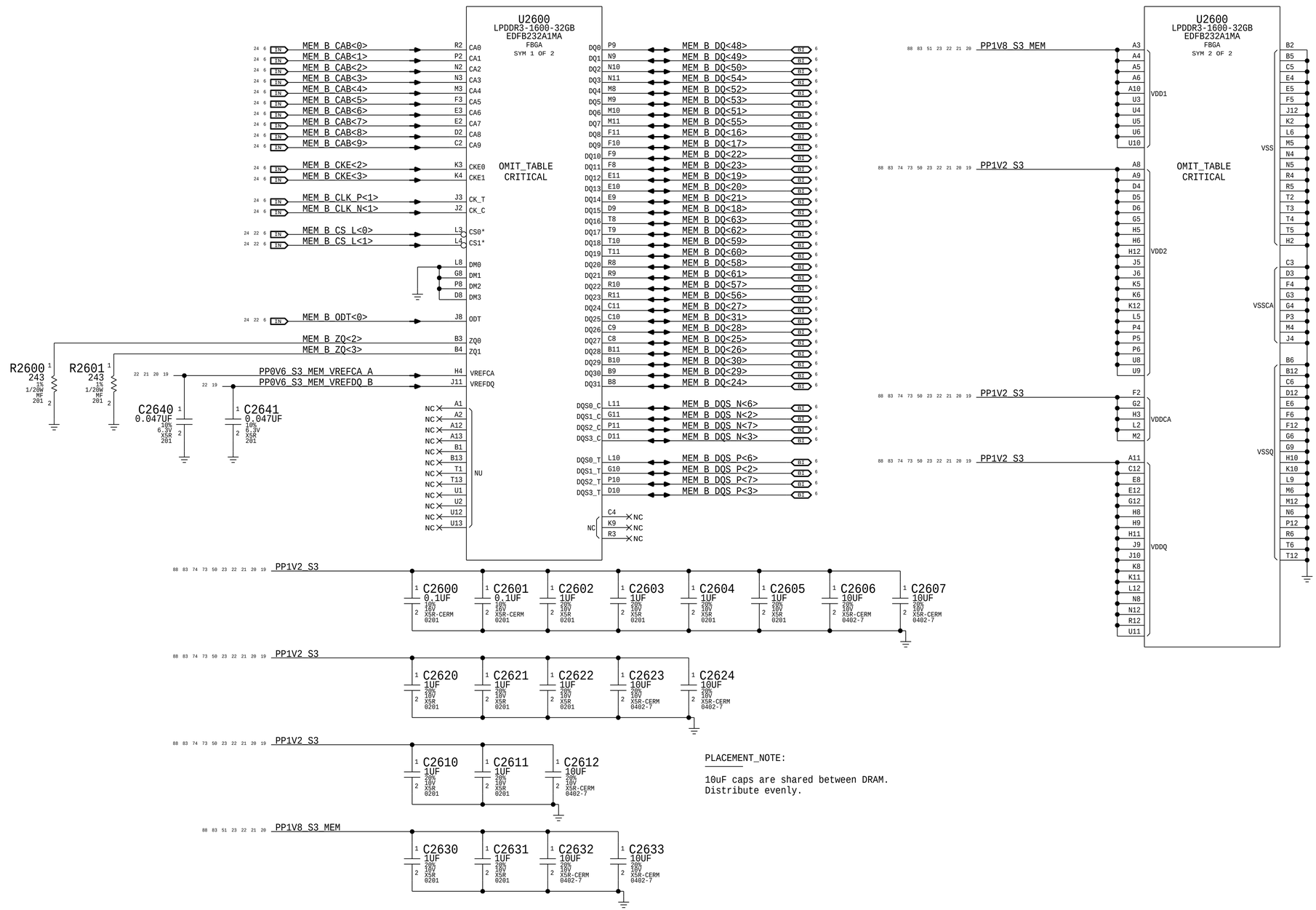

PLACEMENT_NOTE:

10uF caps are shared between DRAM.
Distribute evenly.

BOM_COST_GROUP=DRAM

SYNC_MASTER= SYNC_DATE=

PAGE TITLE
LPDDR3 DRAM Channel B (32-63)

Apple Inc.

NOTICE OF PROPRIETARY PROPERTY:
THE INFORMATION CONTAINED HEREIN IS THE PROPRIETARY PROPERTY OF APPLE INC.
THE POSESSOR AGREES TO THE FOLLOWING:
I TO MAINTAIN THIS DOCUMENT IN CONFIDENCE
II NOT TO REPRODUCE OR COPY IT
III NOT TO REVEAL OR PUBLISH IT IN WHOLE OR PART
IV ALL RIGHTS RESERVED

DRAWING NUMBER	051-05309
SIZE	D
REVISION	6.0.0
BRANCH	pvt
PAGE	26 OF 500
SHEET	23 OF 98

Intel recommends 68 Ohm for CMD/ADDR, 80 Ohm for CTRL/CKE, 38 Ohm for CLK

88 83 73 24 PP0V6_S0_DDRVTT

20 6	IN	MEM_A_CAA<9>	R2700	68	1%	1/20W	201	MF	C2700 0.47UF 20% 4V CERM-X5R-1 201
20 6	IN	MEM_A_CAA<8>	R2701	68	1%	1/20W	201	MF	
20 6	IN	MEM_A_CAA<6>	R2702	68	1%	1/20W	201	MF	C2701 0.47UF 20% 4V CERM-X5R-1 201 / C2702 0.47UF 20% 4V CERM-X5R-1 201
20 6	IN	MEM_A_CAA<7>	R2703	68	1%	1/20W	201	MF	
20 6	IN	MEM_A_CAA<5>	R2704	68	1%	1/20W	201	MF	
20 6	IN	MEM_A_CLK_P<0>	R2705	39	1%	1/20W	201	MF	
20 6	IN	MEM_A_CLK_N<0>	R2706	39	1%	1/20W	201	MF	
20 6	IN	MEM_A_CKE<1>	R2707	82	1%	1/20W	201	MF	C2703 0.47UF 20% 4V CERM-X5R-1 201 / C2704 0.47UF 20% 4V CERM-X5R-1 201
20 6	IN	MEM_A_CKE<0>	R2708	82	1%	1/20W	201	MF	
20 6	IN	MEM_A_CAA<4>	R2709	68	1%	1/20W	201	MF	
20 6	IN	MEM_A_CAA<3>	R2710	68	1%	1/20W	201	MF	
20 6	IN	MEM_A_CAA<2>	R2711	68	1%	1/20W	201	MF	
20 6	IN	MEM_A_CAA<1>	R2712	68	1%	1/20W	201	MF	
20 6	IN	MEM_A_CAA<0>	R2713	68	1%	1/20W	201	MF	
21 6	IN	MEM_A_CAB<9>	R2714	68	1%	1/20W	201	MF	
21 6	IN	MEM_A_CAB<8>	R2715	68	1%	1/20W	201	MF	
21 6	IN	MEM_A_CAB<6>	R2716	68	1%	1/20W	201	MF	
21 6	IN	MEM_A_CAB<7>	R2717	68	1%	1/20W	201	MF	
21 6	IN	MEM_A_CAB<5>	R2718	68	1%	1/20W	201	MF	
21 6	IN	MEM_A_CLK_P<1>	R2719	39	1%	1/20W	201	MF	C2705 0.47UF 20% 4V CERM-X5R-1 201 / C2706 0.47UF 20% 4V CERM-X5R-1 201
21 6	IN	MEM_A_CLK_N<1>	R2720	39	1%	1/20W	201	MF	
21 6	IN	MEM_A_CKE<2>	R2721	82	1%	1/20W	201	MF	
21 6	IN	MEM_A_CKE<3>	R2722	82	1%	1/20W	201	MF	
21 6	IN	MEM_A_CAB<4>	R2723	68	1%	1/20W	201	MF	
21 6	IN	MEM_A_CAB<2>	R2724	68	1%	1/20W	201	MF	
21 6	IN	MEM_A_CAB<3>	R2725	68	1%	1/20W	201	MF	
21 6	IN	MEM_A_CAB<1>	R2726	68	1%	1/20W	201	MF	C2707 0.47UF 20% 4V CERM-X5R-1 201 / C2708 0.47UF 20% 4V CERM-X5R-1 201
21 6	IN	MEM_A_CAB<0>	R2727	68	1%	1/20W	201	MF	
21 20 6	IN	MEM_A_CS_L<0>	R2728	82	1%	1/20W	201	MF	
21 20 6	IN	MEM_A_CS_L<1>	R2729	82	1%	1/20W	201	MF	
21 20 6	IN	MEM_A_ODT<0>	R2730	82	1%	1/20W	201	MF	C2709 0.47UF 20% 4V CERM-X5R-1 201

CRITICAL
C2720 20UF 20% 6.3V CERM-X5R 0402

88 83 73 24 PP0V6_S0_DDRVTT

22 6	IN	MEM_B_CAA<9>	R2740	68	1%	1/20W	201	MF	C2710 0.47UF 20% 4V CERM-X5R-1 201
22 6	IN	MEM_B_CAA<8>	R2741	68	1%	1/20W	201	MF	
22 6	IN	MEM_B_CAA<7>	R2742	68	1%	1/20W	201	MF	C2711 0.47UF 20% 4V CERM-X5R-1 201 / C2712 0.47UF 20% 4V CERM-X5R-1 201
22 6	IN	MEM_B_CAA<6>	R2743	68	1%	1/20W	201	MF	
22 6	IN	MEM_B_CAA<5>	R2744	68	1%	1/20W	201	MF	
22 6	IN	MEM_B_CLK_P<0>	R2745	39	1%	1/20W	201	MF	
22 6	IN	MEM_B_CLK_N<0>	R2746	39	1%	1/20W	201	MF	
22 6	IN	MEM_B_CKE<1>	R2747	82	1%	1/20W	201	MF	C2713 0.47UF 20% 4V CERM-X5R-1 201 / C2714 0.47UF 20% 4V CERM-X5R-1 201
22 6	IN	MEM_B_CKE<0>	R2748	82	1%	1/20W	201	MF	
22 6	IN	MEM_B_CAA<4>	R2749	68	1%	1/20W	201	MF	
22 6	IN	MEM_B_CAA<2>	R2750	68	1%	1/20W	201	MF	
22 6	IN	MEM_B_CAA<3>	R2751	68	1%	1/20W	201	MF	
22 6	IN	MEM_B_CAA<1>	R2752	68	1%	1/20W	201	MF	
22 6	IN	MEM_B_CAA<0>	R2753	68	1%	1/20W	201	MF	
23 6	IN	MEM_B_CAB<9>	R2754	68	1%	1/20W	201	MF	
23 6	IN	MEM_B_CAB<8>	R2755	68	1%	1/20W	201	MF	
23 6	IN	MEM_B_CAB<7>	R2756	68	1%	1/20W	201	MF	
23 6	IN	MEM_B_CAB<6>	R2757	68	1%	1/20W	201	MF	
23 6	IN	MEM_B_CAB<5>	R2758	68	1%	1/20W	201	MF	
23 6	IN	MEM_B_CLK_N<1>	R2759	39	1%	1/20W	201	MF	C2715 0.47UF 20% 4V CERM-X5R-1 201 / C2716 0.47UF 20% 4V CERM-X5R-1 201
23 6	IN	MEM_B_CLK_P<1>	R2760	39	1%	1/20W	201	MF	
23 6	IN	MEM_B_CKE<2>	R2761	82	1%	1/20W	201	MF	
23 6	IN	MEM_B_CKE<3>	R2762	82	1%	1/20W	201	MF	
23 6	IN	MEM_B_CAB<4>	R2763	68	1%	1/20W	201	MF	
23 6	IN	MEM_B_CAB<2>	R2764	68	1%	1/20W	201	MF	
23 6	IN	MEM_B_CAB<3>	R2765	68	1%	1/20W	201	MF	
23 6	IN	MEM_B_CAB<1>	R2766	68	1%	1/20W	201	MF	C2717 0.47UF 20% 4V CERM-X5R-1 201 / C2718 0.47UF 20% 4V CERM-X5R-1 201
23 6	IN	MEM_B_CAB<0>	R2767	68	1%	1/20W	201	MF	
23 22 6	IN	MEM_B_CS_L<0>	R2768	82	1%	1/20W	201	MF	
23 22 6	IN	MEM_B_CS_L<1>	R2769	82	1%	1/20W	201	MF	
23 22 6	IN	MEM_B_ODT<0>	R2770	82	1%	1/20W	201	MF	C2719 0.47UF 20% 4V CERM-X5R-1 201

CRITICAL
C2740 20UF 20% 6.3V CERM-X5R 0402

BOM_COST_GROUP=DRAM

SYNC_MASTER= SYNC_DATE=

PAGE TITLE
LPDDR3 DRAM Termination

Apple Inc.

DRAWING NUMBER 051-05309 SIZE D
REVISION 6.0.0
BRANCH pvt
PAGE 27 OF 500
SHEET 24 OF 98

NOTICE OF PROPRIETARY PROPERTY:
THE INFORMATION CONTAINED HEREIN IS THE PROPRIETARY PROPERTY OF APPLE INC.
THE POSESSOR AGREES TO THE FOLLOWING:
I TO MAINTAIN THIS DOCUMENT IN CONFIDENCE
II NOT TO REPRODUCE OR COPY IT
III NOT TO REVEAL OR PUBLISH IT IN WHOLE OR PART
IV ALL RIGHTS RESERVED

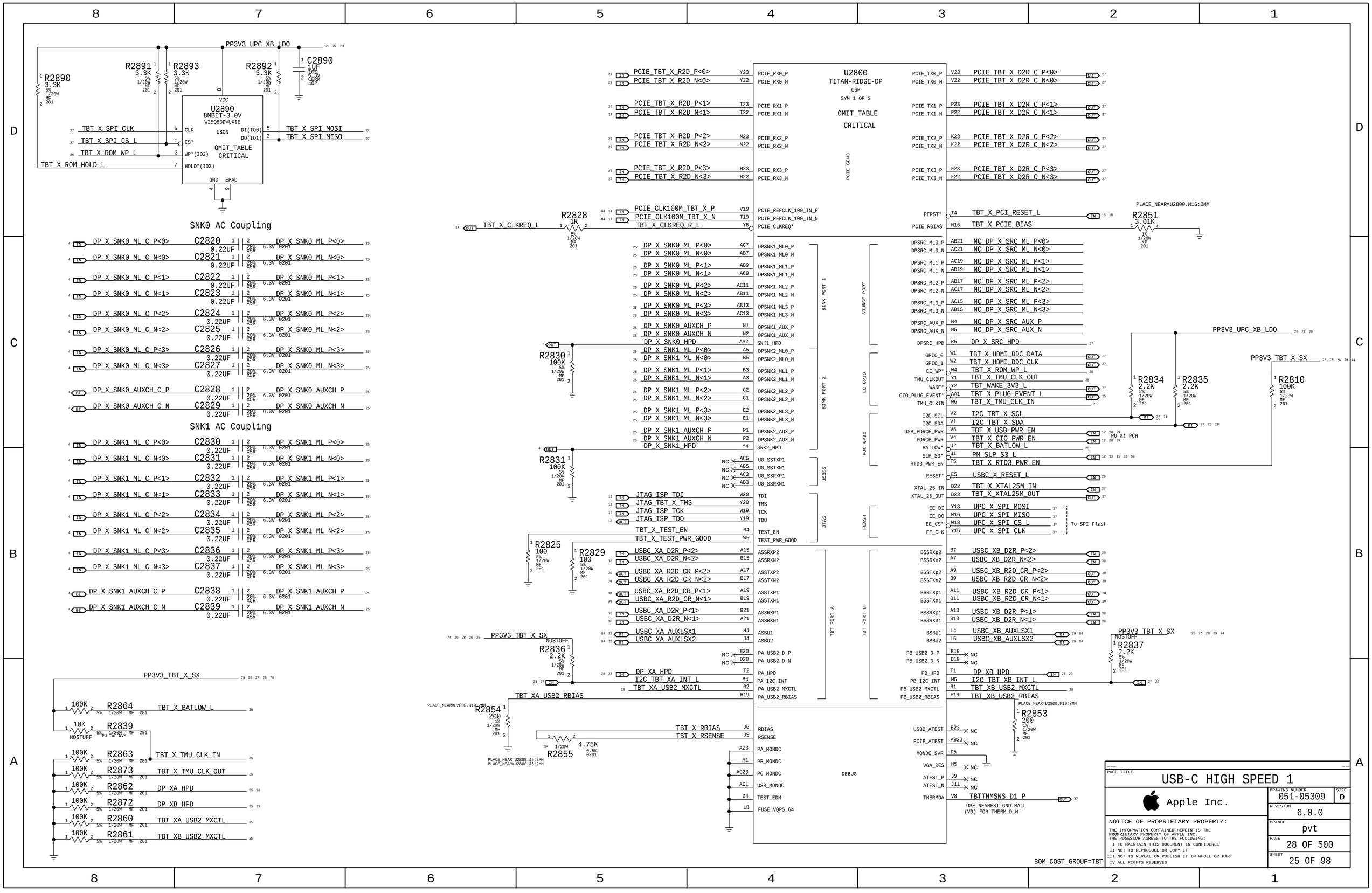
PP3V3_UPC_XB_LDO
R2890 3.3K 5% 1/20W MF 201
R2891 3.3K 5% 1/20W MF 201
R2893 3.3K 5% 1/20W MF 201
R2892 3.3K 5% 1/20W MF 201
C2890 1UF 10% 6.3V CERM 402
U2890 8MBIT-3.0V W25Q80DVUXIE
USON
OMIT_TABLE CRITICAL
TBT_X_SPI_CLK
TBT_X_SPI_CS_L
TBT_X_ROM_WP_L
TBT_X_ROM_HOLD_L
TBT_X_SPI_MOSI
TBT_X_SPI_MISO
SNK0 AC Coupling
SNK1 AC Coupling
U2800 TITAN-RIDGE-DP CSP SYM 1 OF 2
OMIT_TABLE CRITICAL
PCIE GEN3
SINK PORT 1
SINK PORT 2
SOURCE PORT
LC GPIO
POC GPIO
USB3S
JTAG
FLASH
TBT PORT A
TBT PORT B
DEBUG
PCIE_TBT_X_R2D_P<0>
PCIE_TBT_X_R2D_N<0>
PCIE_TBT_X_R2D_P<1>
PCIE_TBT_X_R2D_N<1>
PCIE_TBT_X_R2D_P<2>
PCIE_TBT_X_R2D_N<2>
PCIE_TBT_X_R2D_P<3>
PCIE_TBT_X_R2D_N<3>
PCIE_TBT_X_D2R_C_P<0>
PCIE_TBT_X_D2R_C_N<0>
PCIE_TBT_X_D2R_C_P<1>
PCIE_TBT_X_D2R_C_N<1>
PCIE_TBT_X_D2R_C_P<2>
PCIE_TBT_X_D2R_C_N<2>
PCIE_TBT_X_D2R_C_P<3>
PCIE_TBT_X_D2R_C_N<3>
PCIE_CLK100M_TBT_X_P
PCIE_CLK100M_TBT_X_N
TBT_X_CLKREQ_L
TBT_X_CLKREQ_R_L
TBT_X_PCI_RESET_L
TBT_X_PCIE_BIAS
PLACE_NEAR=U2800.N16:2MM
R2828 1K 5% 1/20W MF 201
R2851 3.01K 1% 1/20W MF 201
R2830 100K 5% 1/20W MF 201
R2831 100K 5% 1/20W MF 201
DP_X_SNK0_HPD
DP_X_SNK1_HPD
DP_X_SRC_HPD
TBT_X_HDMI_DDC_DATA
TBT_X_HDMI_DDC_CLK
TBT_X_ROM_WP_L
TBT_X_TMU_CLK_OUT
TBT_WAKE_3V3_L
TBT_X_PLUG_EVENT_L
TBT_X_TMU_CLK_IN
I2C_TBT_X_SCL
I2C_TBT_X_SDA
TBT_X_USB_PWR_EN
TBT_X_CIO_PWR_EN
TBT_X_BATLOW_L
PM_SLP_S3_L
TBT_X_RTD3_PWR_EN
USBC_X_RESET_L
TBT_X_XTAL25M_IN
TBT_X_XTAL25M_OUT
UPC_X_SPI_MOSI
UPC_X_SPI_MISO
UPC_X_SPI_CS_L
UPC_X_SPI_CLK
To SPI Flash
PU at PCH
PP3V3_TBT_X_SX
R2834 2.2K 5% 1/20W MF 201
R2835 2.2K 5% 1/20W MF 201
R2810 100K 5% 1/20W MF 201
JTAG_ISP_TDI
JTAG_TBT_X_TMS
JTAG_ISP_TCK
JTAG_ISP_TDO
TBT_X_TEST_EN
TBT_X_TEST_PWR_GOOD
R2825 100 5% 1/20W MF 201
R2829 100 5% 1/20W MF 201
USBC_XA_D2R_P<2>
USBC_XA_D2R_N<2>
USBC_XA_R2D_CR_P<2>
USBC_XA_R2D_CR_N<2>
USBC_XA_R2D_CR_P<1>
USBC_XA_R2D_CR_N<1>
USBC_XA_D2R_P<1>
USBC_XA_D2R_N<1>
USBC_XA_AUXLSX1
USBC_XA_AUXLSX2
USBC_XB_D2R_P<2>
USBC_XB_D2R_N<2>
USBC_XB_R2D_CR_P<2>
USBC_XB_R2D_CR_N<2>
USBC_XB_R2D_CR_P<1>
USBC_XB_R2D_CR_N<1>
USBC_XB_D2R_P<1>
USBC_XB_D2R_N<1>
USBC_XB_AUXLSX1
USBC_XB_AUXLSX2
PP3V3_TBT_X_SX
NOSTUFF
R2836 2.2K 5% 1/20W MF 201
R2837 2.2K 5% 1/20W MF 201
DP_XA_HPD
I2C_TBT_XA_INT_L
TBT_XA_USB2_MXCTL
TBT_XA_USB2_RBIAS
DP_XB_HPD
I2C_TBT_XB_INT_L
TBT_XB_USB2_MXCTL
TBT_XB_USB2_RBIAS
PLACE_NEAR=U2800.H19:2MM
R2854 200 1% 1/20W MF 201
R2853 200 1% 1/20W MF 201
PLACE_NEAR=U2800.F19:2MM
TBT_X_RBIAS
TBT_X_RSENSE
R2855 4.75K 0.5% 0201
PLACE_NEAR=U2800.J5:2MM
PLACE_NEAR=U2800.J6:2MM
R2864 100K 5% 1/20W MF 201
TBT_X_BATLOW_L
R2839 10K 5% 1/20W MF 201
NOSTUFF
PU to PVNM
R2863 100K 5% 1/20W MF 201
TBT_X_TMU_CLK_IN
R2873 100K 5% 1/20W MF 201
TBT_X_TMU_CLK_OUT
R2862 100K 5% 1/20W MF 201
DP_XA_HPD
R2872 100K 5% 1/20W MF 201
DP_XB_HPD
R2860 100K 5% 1/20W MF 201
TBT_XA_USB2_MXCTL
R2861 100K 5% 1/20W MF 201
TBT_XB_USB2_MXCTL
USE NEAREST GND BALL (V9) FOR THERM_D_N
BOM_COST_GROUP=TBT
PAGE TITLE
USB-C HIGH SPEED 1
Apple Inc.
DRAWING NUMBER 051-05309
SIZE D
REVISION 6.0.0
BRANCH pvt
PAGE 28 OF 500
SHEET 25 OF 98
NOTICE OF PROPRIETARY PROPERTY:
THE INFORMATION CONTAINED HEREIN IS THE PROPRIETARY PROPERTY OF APPLE INC.
THE POSESSOR AGREES TO THE FOLLOWING:
I TO MAINTAIN THIS DOCUMENT IN CONFIDENCE
II NOT TO REPRODUCE OR COPY IT
III NOT TO REVEAL OR PUBLISH IT IN WHOLE OR PART
IV ALL RIGHTS RESERVED

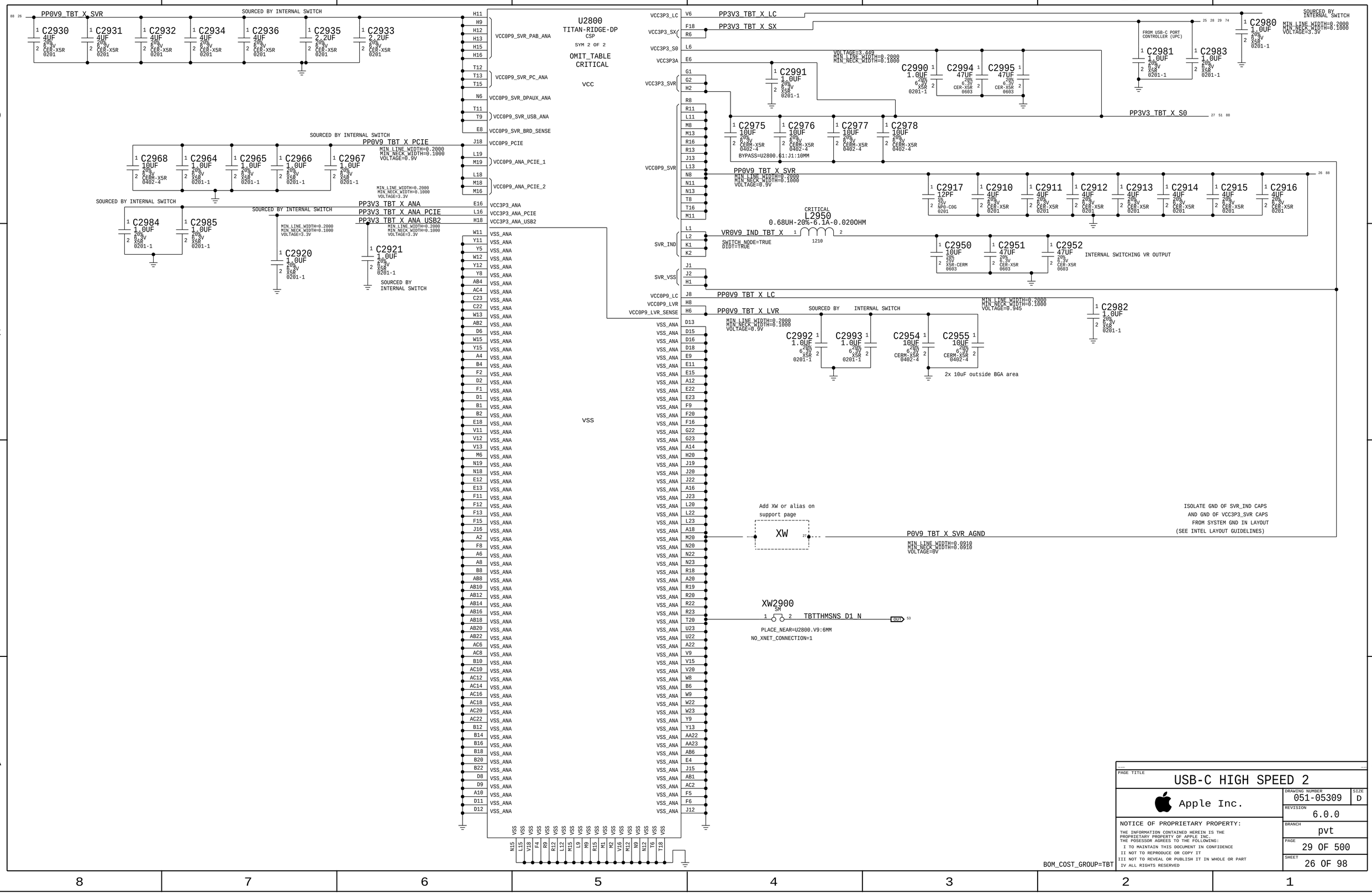

PAGE TITLE
USB-C HIGH SPEED 2

Apple Inc.

DRAWING NUMBER 051-05309 SIZE D
REVISION 6.0.0
BRANCH pvt
PAGE 29 OF 500
SHEET 26 OF 98

NOTICE OF PROPRIETARY PROPERTY:
THE INFORMATION CONTAINED HEREIN IS THE PROPRIETARY PROPERTY OF APPLE INC.
THE POSESSOR AGREES TO THE FOLLOWING:
I TO MAINTAIN THIS DOCUMENT IN CONFIDENCE
II NOT TO REPRODUCE OR COPY IT
III NOT TO REVEAL OR PUBLISH IT IN WHOLE OR PART
IV ALL RIGHTS RESERVED

USB VBUS Detect

R3081 0 5% MF 1/20W 0201
PP1V8_AWAKE
R3080 30K 5% 1/20W MF 201 NOSTUFF
PP20V_USBC_XA_VBUS
<rdar://25149752>
SOC_USB_VBUS
D3001 BZT52C3V0LP-COMBO DFN1006 NOSTUFF

Ridge 0.9V SVR XW

XW3001 SHORT-L6-SM
P0V9_TBT_X_SVR_AGND
NO_XNET_CONNECTION=1

DP SRC OPTIONS

R3040 100K 5% 1/20W MF 201
DP_X_SRC_HPD

TR XTAL

TBT_X_XTAL25M_OUT
CRITICAL
Y3000 25MHZ-25PPM-20PF-50OHM 2.00X1.60-SM
C3002 20PF 5% 25V C0G 0201
C3003 20PF 5% 25V C0G 0201
TBT_X_XTAL25M_IN

PP1V8_SLPS2R
PP3V3_G3H_RTC
R3065 100K 201 MF 1/20W 5%
TBT_WAKE_L
SMC HAS IPU
TBT_WAKE_3V3_L
Q3001 DMN2250UFB DFN1006-3

RIDGE TBT X ARKANOID CONN

NOTE:J3001 IS DELETED DUE

TO SPACE LIMITATION.

SIGNALS CAN BE CONNECTED AT ICT TP

ACE2 ARKANOID DEBUG CONN

USBC_ARKANOID
J3000 505070-1222 M-ST-SM

I2C_TBT_XB_INT_L	1	2	I2C_TBT_XA_INT_L
I2C_UPC_X_SCL2	3	4	I2C_TBT_X_SDA
I2C_UPC_X_SDA2	5	6	I2C_TBT_X_SCL
UPC_I2C_INT_L	7	8	UPC_XA_SER_DBG
TBT_X_SPI_ARK_CLK	9	10	UPC_XB_SER_DBG
UPC_XA_UART_TX	11	12	UPC_XA_UART_RX

DEBUG PATHS

PCH USB3 (DCI) — XB UPC DBG [3:0]

USB3_BSSB_D2R_P	R3012 0 5% 1/20W MF 0201	USB3_BSSB_D2R_R_P	
USB3_BSSB_D2R_N	R3013 0 5% 1/20W MF 0201	USB3_BSSB_D2R_R_N	
USB3_BSSB_R2D_C_P	C3010 0.1UF 10% 16V X5R-CERM 0201	USB3_BSSB_R2D_P	
USB3_BSSB_R2D_C_N	C3011 0.1UF 10% 16V X5R-CERM 0201	USB3_BSSB_R2D_N	

H9M — XB UPC DBG [5:4]

SWD_SOC_DEBUG_SWCLK	R3014 0 5% 1/20W MF 0201 (PLACE_NEAR=U3100.G16:5MM)	SWD_SOC_SWCLK_XB
SWD_SOC_DEBUG_SWDIO	R3015 0 5% 1/20W MF 0201 (PLACE_NEAR=U3100.F15:5MM)	SWD_SOC_SWDIO_XB

PCH UART 2 — XA UPC DBG [7:6]

PCH_UART_DEBUG_R2D	R3016 0 5% 1/20W MF 0201 (PLACE_NEAR=U3100.D15:5MM)	PCH_UART_DEBUG_R_R2D
PCH_UART_DEBUG_D2R	R3017 0 5% 1/20W MF 0201	PCH_UART_DEBUG_R_D2R

PLACE_NEAR=U3100.D19:5MM

ACE2 PULL DOWNS

R3039	100K 5% 1/20W MF 201	PD_UPC_XA_GPIO4
R3038	100K 5% 1/20W MF 201	PD_UPC_XB_GPIO1
R3037	100K 5% 1/20W MF 201	PD_UPC_XB_GPIO4
R3036	100K 5% 1/20W MF 201	PD_UPC_XB_GPIO9
R3035	100K 5% 1/20W MF 201	PD_UPC_XB_GPIO10
R3034	100K 5% 1/20W MF 201	PD_UPC_X_5V_EN
R3033	100K 5% 1/20W MF 201	SPARE_UPC_XA_USB3_RN
R3032	100K 5% 1/20W MF 201	SPARE_UPC_XA_USB3_RP
R3031	100K 5% 1/20W MF 201	SPARE_UPC_XB_USB3_RN
R3030	100K 5% 1/20W MF 201	SPARE_UPC_XB_USB3_RP
R3029	100K 5% 1/20W MF 201	SPARE_UPC_XB_USB2_RN
R3028	100K 5% 1/20W MF 201	SPARE_UPC_XB_USB2_RP
R3027	100K 5% 1/20W MF 201	SPARE_UPC_XA_DBG0_R
R3026	100K 5% 1/20W MF 201	SPARE_UPC_XA_DBG1_R
R3025	100K 5% 1/20W MF 201	SPARE_UPC_XA_DBG2_R
R3024	100K 5% 1/20W MF 201	SPARE_UPC_XA_DBG3_R
R3023	0 NOSTUFF 5% 1/20W MF 0201	UPC_XA_VDDIO_CFG
R3022	0 NOSTUFF 5% 1/20W MF 0201	UPC_XB_VDDIO_CFG
R3021	0 5% 1/20W MF 0201	UPC_XA_RESET
R3020	0 5% 1/20W MF 0201	UPC_XB_RESET

AARDVARKANOID CONN

NO 3D BODY PART USED PER <RDAR://48050692>

OMIT_TABLE
J3002 505070-1222 SM

PP3V3_UPC_XB_LDO	1	2	TBT_X_SPI_DBG_CS_L
UPC_XB_SWD_DATA	3	4	TBT_X_SPI_DBG_CLK
UPC_XB_SWD_CLK	5	6	TBT_X_SPI_DBG_MOSI
TBT_X_SPI_DBG_MISO	7	8	UPC_XA_SWD_CLK
I2C_TBT_X_SDA	9	10	UPC_XA_SWD_DATA
I2C_TBT_X_SCL	11	12	PP3V3_UPC_XA_LDO

RIDGE PULL UP/DOWN

PP3V3_TBT_X_S0

R3043	100K 5% 1/20W MF 201	TBT_X_HDMI_DDC_CLK
R3044	100K 5% 1/20W MF 201	TBT_X_HDMI_DDC_DATA

X ACE-SMC I2C SERIES R'S

PLACE_NEAR=U3200.B7:7MM
I2C_UPC_SDA — R3045 0 5% 1/20W MF 0201 (CKPLUS_WAIVE=I2C_PULLUP) — I2C_UPC_X_SDA2
I2C_UPC_SCL — R3046 0 5% 1/20W MF 0201 (CKPLUS_WAIVE=I2C_PULLUP) — I2C_UPC_X_SCL2
PLACE_NEAR=U3200.A6:7MM

FOR LAYOUT PURPOSES: DIRECTLY CONNECT TO XB
THEN BRANCH OFF TO XA AND ARKANOID CONNECTOR

USB2 OC

R3047 0 5% 1/20W MF 0201
UPC_XA_FAULT_L — UPC_XA_FAULT_L_R

R3048 0 5% 1/20W MF 0201
UPC_XB_FAULT_L — UPC_XB_FAULT_L_R

FUSES FOR UPC

PPDCIN_G3H
F3000 6A-32V 0603-1 — PPDCIN_XA_G3H_F (PLACE_NEAR=U3100:5MM) CRITICAL
C3020 0.1UF 10% 35V CER-X5R 0201
F3001 6A-32V 740S00053 0603-1 — PPDCIN_XB_G3H_F (PLACE_NEAR=U3200:5MM) CRITICAL
C3021 0.1UF 10% 35V CER-X5R 0201

BOM_COST_GROUP=TBT

USBC_ARKANOID — ARKANOID
R3094 100 5% 1/20W MF 201 — TBT_X_SPI_ARK_CLK

USBC_AARDVARKANOID — AARDVARKANOID

R3086	15 5% 1/20W MF 201	TBT_X_SPI_DBG_CLK
R3087	15 5% 1/20W MF 201	TBT_X_SPI_DBG_CS_L
R3088	15 5% 1/20W MF 201	TBT_X_SPI_DBG_MOSI
R3089	15 5% 1/20W MF 201	TBT_X_SPI_DBG_MISO

ROM — XB ACE

TBT_X_SPI_CLK	R3095 15 5% 1/20W MF 201	UPC_XB_SPI_CLK
TBT_X_SPI_CS_L	R3096 15 5% 1/20W MF 201	UPC_XB_SPI_CS_L
TBT_X_SPI_MOSI	R3097 15 5% 1/20W MF 201	UPC_XB_SPI_MOSI
TBT_X_SPI_MISO	R3098 15 5% 1/20W MF 201	UPC_XB_SPI_MISO

TR

R3090	15 5% 1/20W MF 201	UPC_X_SPI_CLK
R3091	15 5% 1/20W MF 201	UPC_X_SPI_CS_L
R3092	15 5% 1/20W MF 201	UPC_X_SPI_MOSI
R3093	15 5% 1/20W MF 201	UPC_X_SPI_MISO

Ridge PCIE Caps

D2R

PCIE_TBT_X_D2R_C_P<0>	C3050 0.22UF 0201 X5R 6.3V 20%	PCIE_TBT_X_D2R_P<0>
PCIE_TBT_X_D2R_C_N<0>	C3051 0.22UF	PCIE_TBT_X_D2R_N<0>
PCIE_TBT_X_D2R_C_P<1>	C3052 0.22UF	PCIE_TBT_X_D2R_P<1>
PCIE_TBT_X_D2R_C_N<1>	C3053 0.22UF	PCIE_TBT_X_D2R_N<1>
PCIE_TBT_X_D2R_C_P<2>	C3054 0.22UF	PCIE_TBT_X_D2R_P<2>
PCIE_TBT_X_D2R_C_N<2>	C3055 0.22UF	PCIE_TBT_X_D2R_N<2>
PCIE_TBT_X_D2R_C_P<3>	C3056 0.22UF	PCIE_TBT_X_D2R_P<3>
PCIE_TBT_X_D2R_C_N<3>	C3057 0.22UF	PCIE_TBT_X_D2R_N<3>

R2D

PCIE_TBT_X_R2D_C_P<0>	C3040 0.22UF 0201 X5R 6.3V 20%	PCIE_TBT_X_R2D_P<0>
PCIE_TBT_X_R2D_C_N<0>	C3041 0.22UF	PCIE_TBT_X_R2D_N<0>
PCIE_TBT_X_R2D_C_P<1>	C3042 0.22UF	PCIE_TBT_X_R2D_P<1>
PCIE_TBT_X_R2D_C_N<1>	C3043 0.22UF	PCIE_TBT_X_R2D_N<1>
PCIE_TBT_X_R2D_C_P<2>	C3044 0.22UF	PCIE_TBT_X_R2D_P<2>
PCIE_TBT_X_R2D_C_N<2>	C3045 0.22UF	PCIE_TBT_X_R2D_N<2>
PCIE_TBT_X_R2D_C_P<3>	C3046 0.22UF	PCIE_TBT_X_R2D_P<3>
PCIE_TBT_X_R2D_C_N<3>	C3047 0.22UF	PCIE_TBT_X_R2D_N<3>

PAGE TITLE: USB-C SUPPORT

Apple Inc.

DRAWING NUMBER: 051-05309 SIZE: D
REVISION: 6.0.0
BRANCH: pvt
PAGE: 30 OF 500
SHEET: 27 OF 98

NOTICE OF PROPRIETARY PROPERTY:
THE INFORMATION CONTAINED HEREIN IS THE PROPRIETARY PROPERTY OF APPLE INC.
THE POSESSOR AGREES TO THE FOLLOWING:
I TO MAINTAIN THIS DOCUMENT IN CONFIDENCE
II NOT TO REPRODUCE OR COPY IT
III NOT TO REVEAL OR PUBLISH IT IN WHOLE OR PART
IV ALL RIGHTS RESERVED

PRIMARY USB-C PORT CONTROLLER (UPC) [FRONT LEFT]

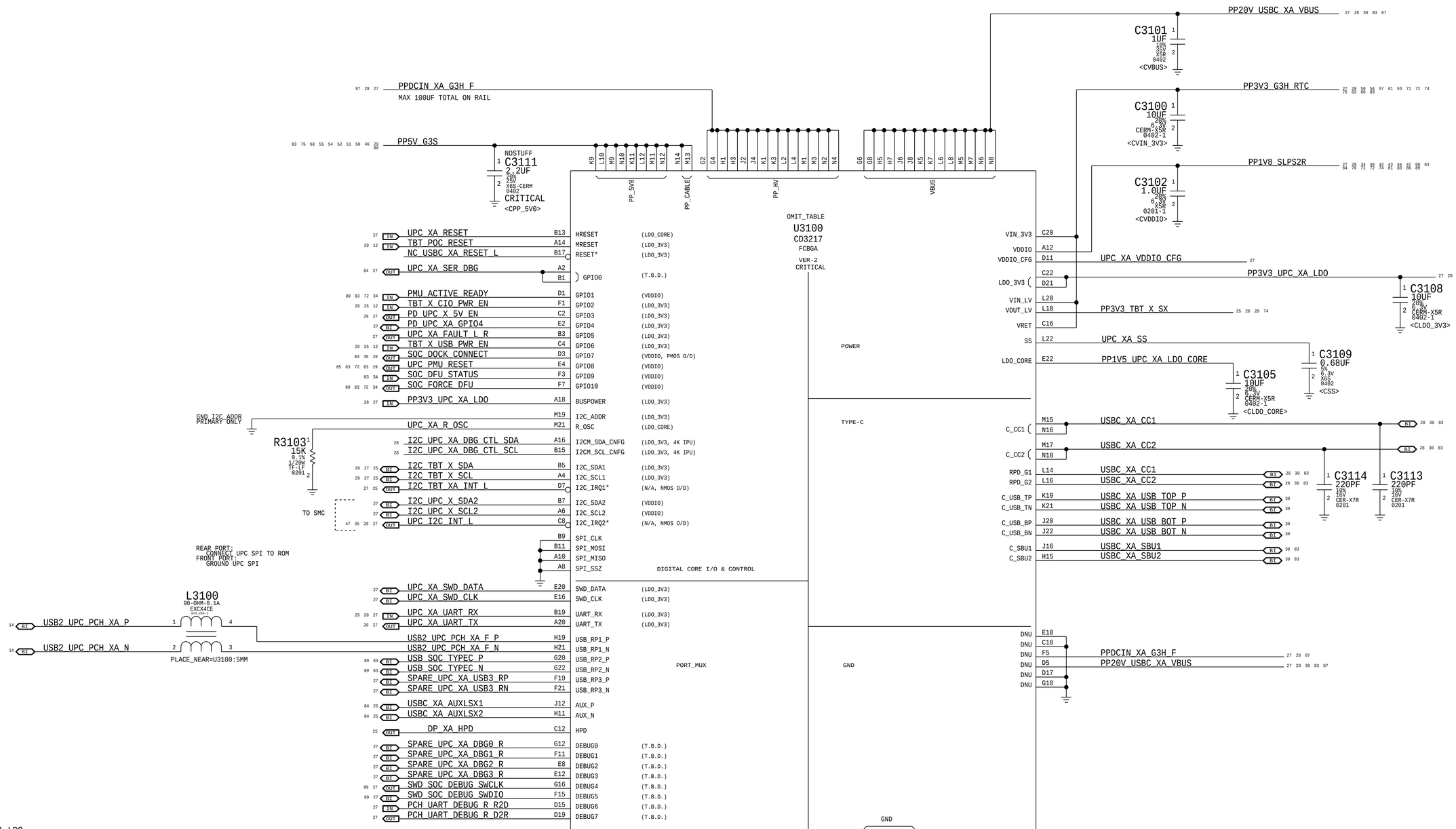

PP3V3_UPC_XA_LDO

R3109 1M 5% 1/20W MF 201 — I2C_UPC_XA_DBG_CTL_SCL

R3108 1M 5% 1/20W MF 201 — I2C_UPC_XA_DBG_CTL_SDA

R3105 1M 5% 1/20W MF 201 — UPC_XA_UART_RX

BOM_COST_GROUP=USB-C

PAGE TITLE: USB-C PORT CONTROLLER A

Apple Inc.

NOTICE OF PROPRIETARY PROPERTY:
THE INFORMATION CONTAINED HEREIN IS THE PROPRIETARY PROPERTY OF APPLE INC.
THE POSESSOR AGREES TO THE FOLLOWING:
I TO MAINTAIN THIS DOCUMENT IN CONFIDENCE
II NOT TO REPRODUCE OR COPY IT
III NOT TO REVEAL OR PUBLISH IT IN WHOLE OR PART
IV ALL RIGHTS RESERVED

DRAWING NUMBER: 051-05309 | SIZE: D
REVISION: 6.0.0
BRANCH: pvt
PAGE: 31 OF 500
SHEET: 28 OF 98

SECONDARY USB-C PORT CONTROLLER (UPC) [REAR LEFT]

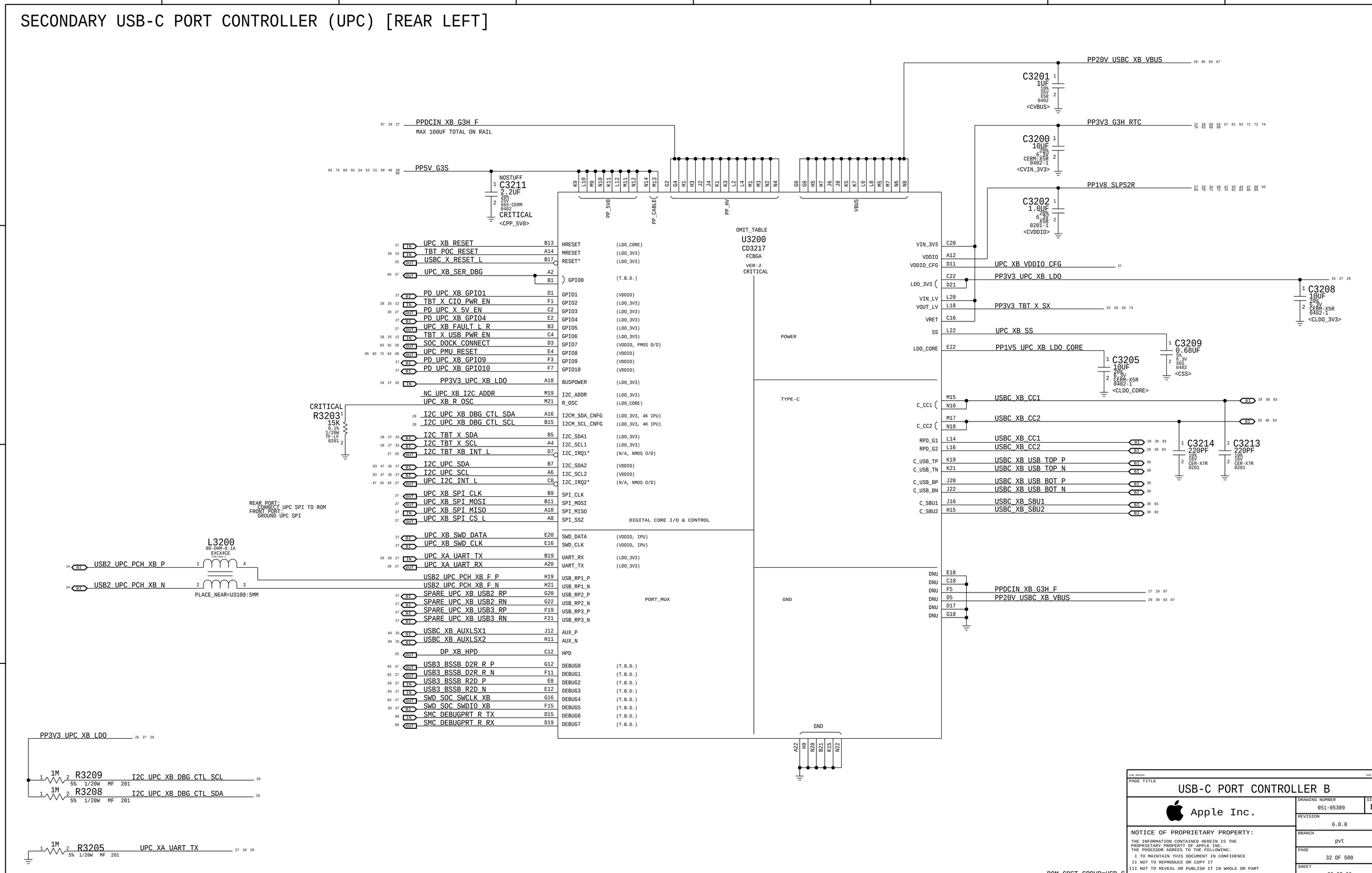

PAGE TITLE

USB-C PORT CONTROLLER B

Apple Inc.

DRAWING NUMBER 051-05309

SIZE D

REVISION 6.0.0

BRANCH pvt

PAGE 32 OF 500

SHEET 29 OF 98

NOTICE OF PROPRIETARY PROPERTY:

THE INFORMATION CONTAINED HEREIN IS THE PROPRIETARY PROPERTY OF APPLE INC.
THE POSESSOR AGREES TO THE FOLLOWING:
I TO MAINTAIN THIS DOCUMENT IN CONFIDENCE
II NOT TO REPRODUCE OR COPY IT
III NOT TO REVEAL OR PUBLISH IT IN WHOLE OR PART
IV ALL RIGHTS RESERVED

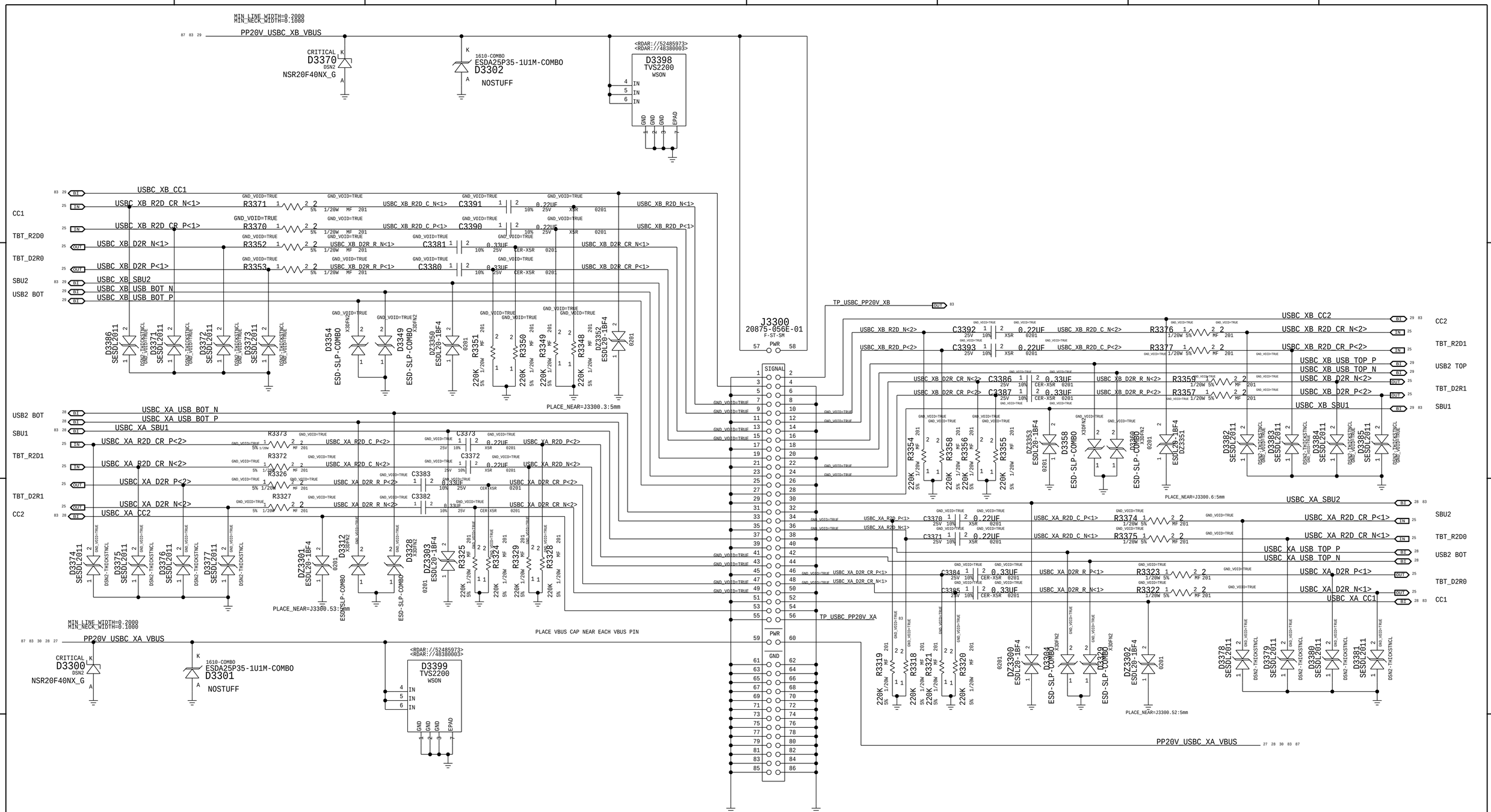

LAST CHANGE: Wed Apr 1 22:57:37 2015

PAGE TITLE
USB-C CONNECTOR A

Apple Inc.

DRAWING NUMBER 051-05309 SIZE D

REVISION 6.0.0

BRANCH pvt

PAGE 33 OF 500

SHEET 30 OF 98

NOTICE OF PROPRIETARY PROPERTY:
THE INFORMATION CONTAINED HEREIN IS THE PROPRIETARY PROPERTY OF APPLE INC.
THE POSESSOR AGREES TO THE FOLLOWING:
I TO MAINTAIN THIS DOCUMENT IN CONFIDENCE
II NOT TO REPRODUCE OR COPY IT
III NOT TO REVEAL OR PUBLISH IT IN WHOLE OR PART
IV ALL RIGHTS RESERVED

BOM_COST_GROUP=WIRELESS

PAGE TITLE

WIFI/BT SUPPORT

Apple Inc.

DRAWING NUMBER	051-05309
SIZE	D
REVISION	6.0.0
BRANCH	pvt
PAGE	36 OF 500
SHEET	31 OF 98

NOTICE OF PROPRIETARY PROPERTY:

THE INFORMATION CONTAINED HEREIN IS THE
PROPRIETARY PROPERTY OF APPLE INC.
THE POSESSOR AGREES TO THE FOLLOWING:

I TO MAINTAIN THIS DOCUMENT IN CONFIDENCE
II NOT TO REPRODUCE OR COPY IT
III NOT TO REVEAL OR PUBLISH IT IN WHOLE OR PART
IV ALL RIGHTS RESERVED

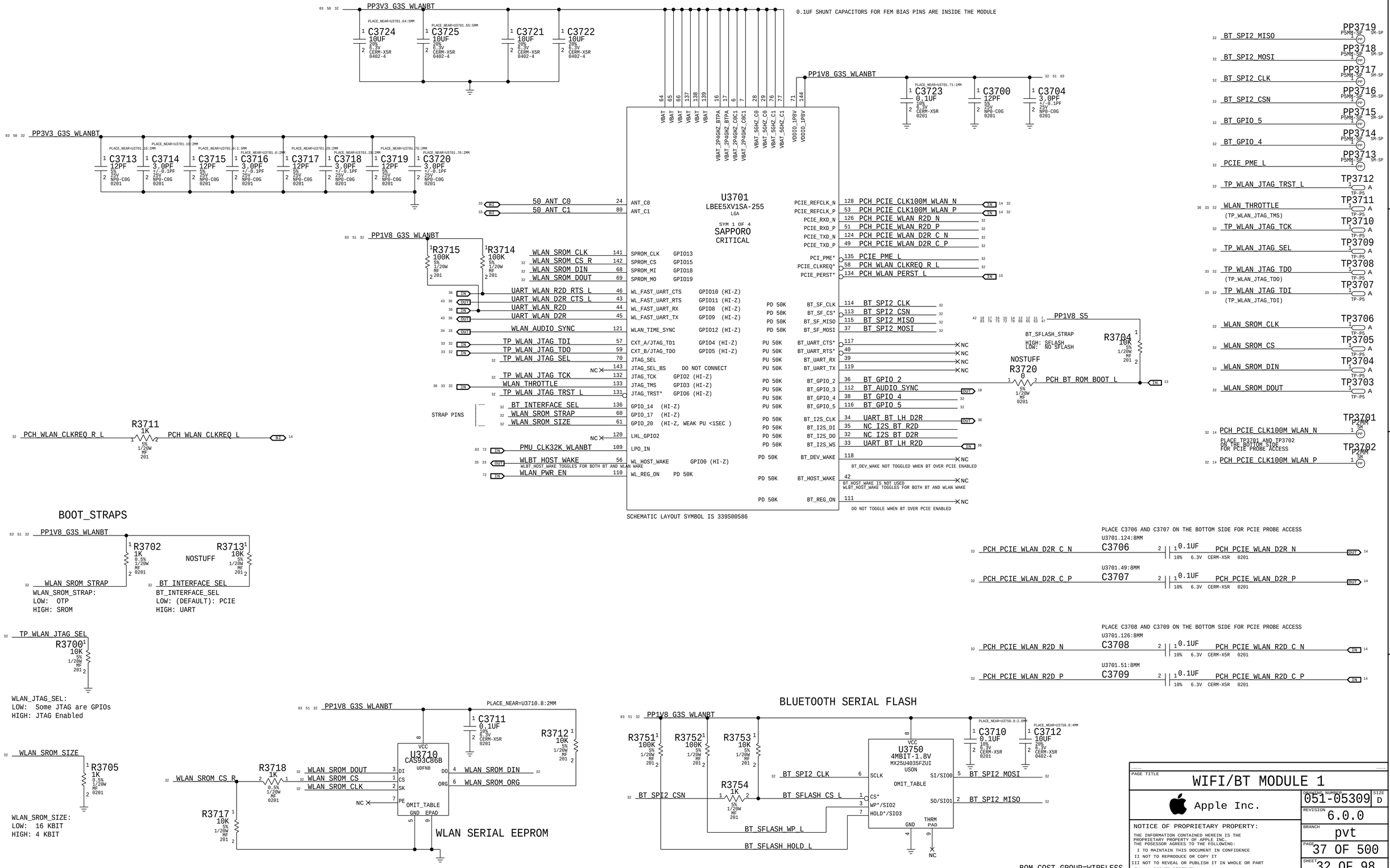
PP3V3_G3S_WLANBT
C3724 10UF 20% 6.3V CERM-X5R 0402-4
C3725 10UF 20% 6.3V CERM-X5R 0402-4
C3721 10UF 20% 6.3V CERM-X5R 0402-4
C3722 10UF 20% 6.3V CERM-X5R 0402-4
0.1UF SHUNT CAPACITORS FOR FEM BIAS PINS ARE INSIDE THE MODULE
PP1V8_G3S_WLANBT
C3723 0.1UF 10% 6.3V CERM-X5R 0201
C3700 12PF 5% 25V NP0-C0G 0201
C3704 3.0PF +/-0.1PF 25V NP0-C0G 0201
C3713 12PF 5% 25V NP0-C0G 0201
C3714 3.0PF +/-0.1PF 25V NP0-C0G 0201
C3715 12PF 5% 25V NP0-C0G 0201
C3716 3.0PF +/-0.1PF 25V NP0-C0G 0201
C3717 12PF 5% 25V NP0-C0G 0201
C3718 3.0PF +/-0.1PF 25V NP0-C0G 0201
C3719 12PF 5% 25V NP0-C0G 0201
C3720 3.0PF +/-0.1PF 25V NP0-C0G 0201
U3701
LBEE5XV1SA-255
LGA
SYM 1 OF 4
SAPPORO
CRITICAL
50_ANT_C0
50_ANT_C1
PP1V8_G3S_WLANBT
R3715 100K 5% 1/20W MF 201
R3714 100K 5% 1/20W MF 201
WLAN_SROM_CLK
WLAN_SROM_CS_R
WLAN_SROM_DIN
WLAN_SROM_DOUT
UART_WLAN_R2D_RTS_L
UART_WLAN_D2R_CTS_L
UART_WLAN_R2D
UART_WLAN_D2R
WLAN_AUDIO_SYNC
TP_WLAN_JTAG_TDI
TP_WLAN_JTAG_TDO
TP_WLAN_JTAG_SEL
TP_WLAN_JTAG_TCK
WLAN_THROTTLE
TP_WLAN_JTAG_TRST_L
BT_INTERFACE_SEL
WLAN_SROM_STRAP
WLAN_SROM_SIZE
STRAP PINS
PMU_CLK32K_WLANBT
WLBT_HOST_WAKE
WLBT_HOST_WAKE TOGGLES FOR BOTH BT AND WLAN WAKE
WLAN_PWR_EN
PCH_PCIE_CLK100M_WLAN_N
PCH_PCIE_CLK100M_WLAN_P
PCH_PCIE_WLAN_R2D_N
PCH_PCIE_WLAN_R2D_P
PCH_PCIE_WLAN_D2R_C_N
PCH_PCIE_WLAN_D2R_C_P
PCIE_PME_L
PCH_WLAN_CLKREQ_R_L
PCH_WLAN_PERST_L
BT_SPI2_CLK
BT_SPI2_CSN
BT_SPI2_MISO
BT_SPI2_MOSI
BT_GPIO_2
BT_AUDIO_SYNC
BT_GPIO_4
BT_GPIO_5
UART_BT_LH_D2R
NC_I2S_BT_R2D
NC_I2S_BT_D2R
UART_BT_LH_R2D
BT_DEV_WAKE NOT TOGGLED WHEN BT OVER PCIE ENABLED
BT_HOST_WAKE IS NOT USED
WLBT_HOST_WAKE TOGGLES FOR BOTH BT AND WLAN WAKE
DO NOT TOGGLE WHEN BT OVER PCIE ENABLED
SCHEMATIC LAYOUT SYMBOL IS 339S00586
PP1V8_S5
BT_SFLASH_STRAP
HIGH: SFLASH
LOW: NO SFLASH
R3704 10K 5% 1/20W MF 201
NOSTUFF
R3720 0 5% 1/20W MF 0201
PCH_BT_ROM_BOOT_L
BT_SFLASH_CS_L
BT_SFLASH_WP_L
BT_SFLASH_HOLD_L
BT_SPI2_MISO
BT_SPI2_MOSI
PCH_PCIE_CLK100M_WLAN_N
PCH_PCIE_CLK100M_WLAN_P
PLACE TP3701 AND TP3702 ON THE BOTTOM SIDE FOR PCIE PROBE ACCESS
TP3701 P2MM SM
TP3702 P2MM SM
TP3719 P5MM-SP SM-SP
TP3718 P5MM-SP SM-SP
TP3717 P5MM-SP SM-SP
TP3716 P5MM-SP SM-SP
TP3715 P5MM-SP SM-SP
TP3714 P5MM-SP SM-SP
TP3713 P5MM-SP SM-SP
TP3712 TP-P5
TP3711 TP-P5
TP3710 TP-P5
TP3709 TP-P5
TP3708 TP-P5
TP3707 TP-P5
TP3706 TP-P5
TP3705 TP-P5
TP3704 TP-P5
TP3703 TP-P5
R3711 1K 5% 1/20W MF 201
PCH_WLAN_CLKREQ_R_L
PCH_WLAN_CLKREQ_L
BOOT_STRAPS
PP1V8_G3S_WLANBT
R3702 1K 0.5% 1/20W MF 0201
NOSTUFF
R3713 10K 5% 1/20W MF 201
WLAN_SROM_STRAP
WLAN_SROM_STRAP:
LOW: OTP
HIGH: SROM
BT_INTERFACE_SEL
BT_INTERFACE_SEL
LOW: (DEFAULT): PCIE
HIGH: UART
TP_WLAN_JTAG_SEL
R3700 10K 5% 1/20W MF 201
WLAN_JTAG_SEL:
LOW: Some JTAG are GPIOs
HIGH: JTAG Enabled
WLAN_SROM_SIZE
R3705 1K 0.5% 1/20W MF 0201
WLAN_SROM_SIZE:
LOW: 16 KBIT
HIGH: 4 KBIT
PLACE C3706 AND C3707 ON THE BOTTOM SIDE FOR PCIE PROBE ACCESS
U3701.124:8MM
C3706 0.1UF 10% 6.3V CERM-X5R 0201
U3701.49:8MM
C3707 0.1UF 10% 6.3V CERM-X5R 0201
PLACE C3708 AND C3709 ON THE BOTTOM SIDE FOR PCIE PROBE ACCESS
U3701.126:8MM
C3708 0.1UF 10% 6.3V CERM-X5R 0201
U3701.51:8MM
C3709 0.1UF 10% 6.3V CERM-X5R 0201
PP1V8_G3S_WLANBT
PLACE_NEAR=U3710.8:2MM
C3711 0.1UF 10% 6.3V CERM-X5R 0201
R3712 10K 5% 1/20W MF 201
U3710
CAS93C86B
UDFN8
OMIT_TABLE
R3718 1K 0.5% 1/20W MF 0201
R3717 10K 5% 1/20W MF 201
WLAN_SROM_CS_R
WLAN_SROM_DOUT
WLAN_SROM_CS
WLAN_SROM_CLK
WLAN_SROM_DIN
WLAN_SROM_ORG
WLAN SERIAL EEPROM
BLUETOOTH SERIAL FLASH
PP1V8_G3S_WLANBT
R3751 100K 5% 1/20W MF 201
R3752 100K 5% 1/20W MF 201
R3753 10K 5% 1/20W MF 201
R3754 1K 5% 1/20W MF 201
U3750
4MBIT-1.8V
MX25U4035FZUI
USON
OMIT_TABLE
C3710 0.1UF 10% 6.3V CERM-X5R 0201
C3712 10UF 20% 6.3V CERM-X5R 0402-4
BT_SPI2_CLK
BT_SPI2_CSN
BT_SPI2_MOSI
BT_SPI2_MISO
BOM_COST_GROUP=WIRELESS
PAGE TITLE
WIFI/BT MODULE 1
Apple Inc.
NOTICE OF PROPRIETARY PROPERTY:
THE INFORMATION CONTAINED HEREIN IS THE PROPRIETARY PROPERTY OF APPLE INC.
THE POSESSOR AGREES TO THE FOLLOWING:
I TO MAINTAIN THIS DOCUMENT IN CONFIDENCE
II NOT TO REPRODUCE OR COPY IT
III NOT TO REVEAL OR PUBLISH IT IN WHOLE OR PART
IV ALL RIGHTS RESERVED
DRAWING NUMBER 051-05309
SIZE D
REVISION 6.0.0
BRANCH pvt
PAGE 37 OF 500
SHEET 32 OF 98

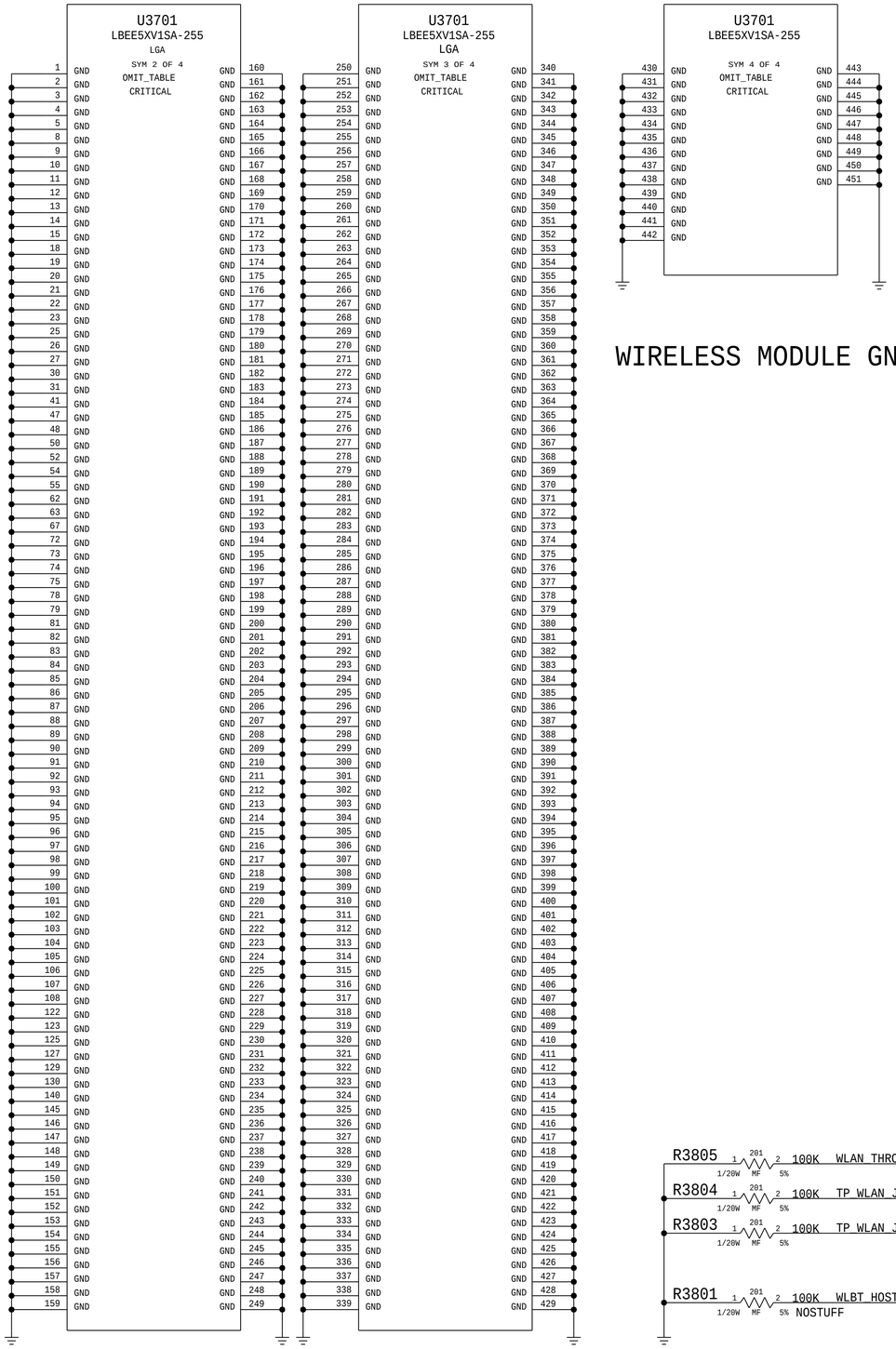

WIRELESS MODULE GND PINS

RF CONNECTORS

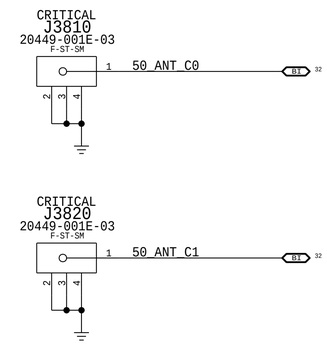

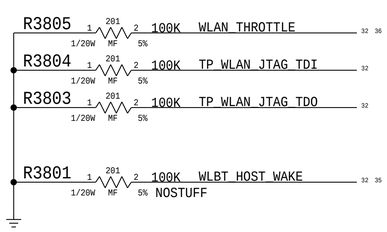

BOM_COST_GROUP=WIRELESS

PAGE TITLE
WIFI/BT MODULE 2

Apple Inc.

DRAWING NUMBER 051-05309 SIZE D
REVISION 6.0.0
BRANCH pvt
PAGE 38 OF 500
SHEET 33 OF 98

NOTICE OF PROPRIETARY PROPERTY:
THE INFORMATION CONTAINED HEREIN IS THE PROPRIETARY PROPERTY OF APPLE INC.
THE POSESSOR AGREES TO THE FOLLOWING:
I TO MAINTAIN THIS DOCUMENT IN CONFIDENCE
II NOT TO REPRODUCE OR COPY IT
III NOT TO REVEAL OR PUBLISH IT IN WHOLE OR PART
IV ALL RIGHTS RESERVED

Note IPU/IPD represents SW configured state, not HW default

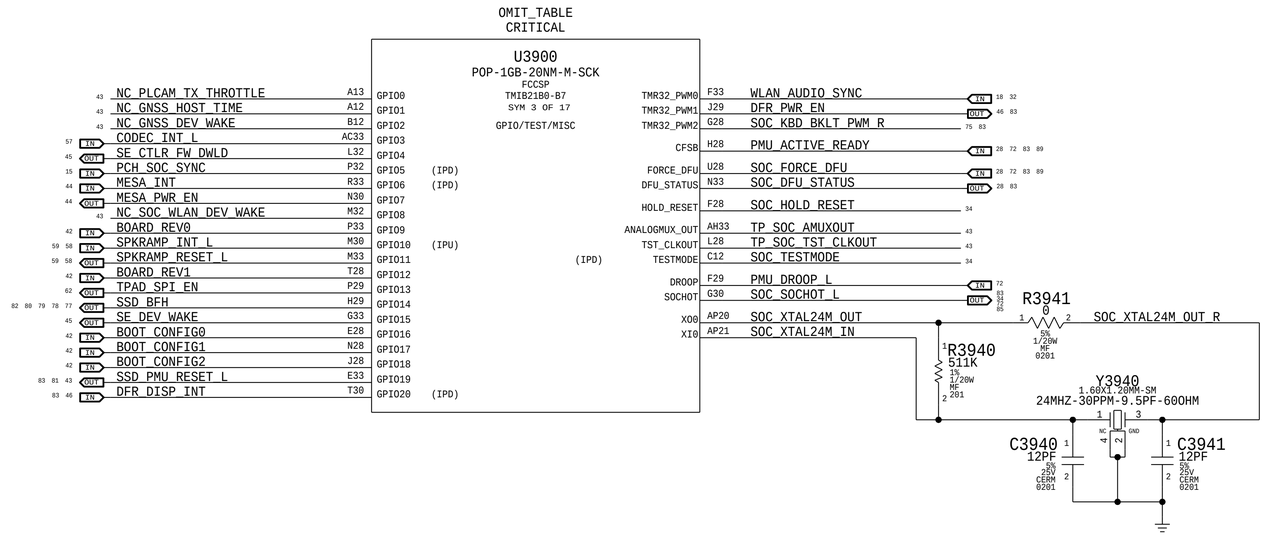

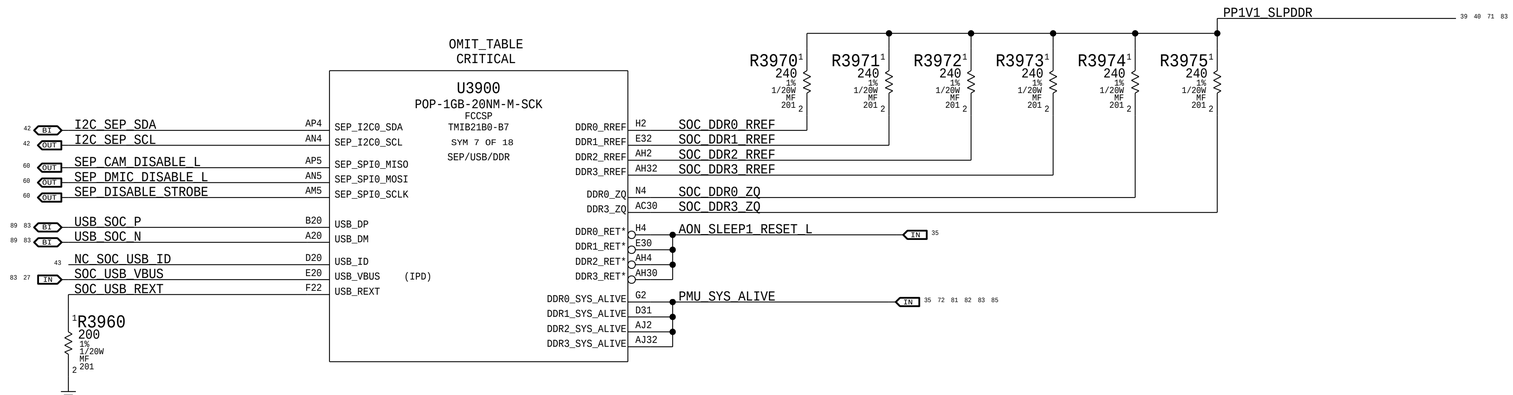

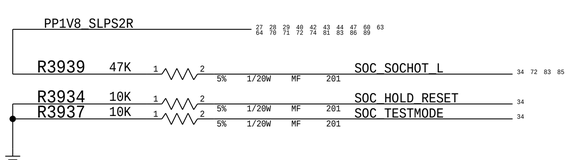

BOM_COST_GROUP=SOC

PAGE TITLE: SOC GPIO/SEP/USB/DDR/TEST

Apple Inc.

DRAWING NUMBER: 051-05309 SIZE: D

REVISION: 6.0.0

BRANCH: pvt

PAGE: 39 OF 500

SHEET: 34 OF 98

NOTICE OF PROPRIETARY PROPERTY:
THE INFORMATION CONTAINED HEREIN IS THE PROPRIETARY PROPERTY OF APPLE INC.
THE POSESSOR AGREES TO THE FOLLOWING:
I TO MAINTAIN THIS DOCUMENT IN CONFIDENCE
II NOT TO REPRODUCE OR COPY IT
III NOT TO REVEAL OR PUBLISH IT IN WHOLE OR PART
IV ALL RIGHTS RESERVED

OMIT_TABLE
CRITICAL

U3900
POP-1GB-20NM-M-SCK
FCCSP
TMIB21B0-B7
SYM 6 OF 17
AOP

43	NC_WLAN_CONTEXT_A	B5	AOP_FUNC[0]		AOP_PDM_CLK0	N6	PDM_DMIC_CLK0_R (OUT 43)
43	NC_WLAN_CONTEXT_B	D4	AOP_FUNC[1]		AOP_PDM_CLK1	J6	PDM_DMIC_CLK1_R (OUT 43)
84 43 (IN)	ACCEL_INT1	G1	AOP_FUNC[2]	(IPD)	AOP_PDM_CLK2 (IPU)	F5	TP_SMC_FIXTURE_MODE_L (83)
43 (IN)	ACCEL_INT2	C5	AOP_FUNC[3]	(IPD)	AOP_PDM_CLK3	F2	NC_PLCAM_PROX_INT_L (43)
45	SE_HOST_WAKE_R	D1	AOP_FUNC[4]		AOP_PDM_CLK4	J4	NC_PLCAM_ROMEO_B2B_DETECT (43)
85 15 (IN)	SOC_PERST_L	E4	AOP_FUNC[5]				
43	NC_ALTIMETER_INT	C4	AOP_FUNC[6]	(IPD)	AOP_PDM_DATA0	F1	PDM_DMIC_DATA0 (IN 60)
84 43 (OUT)	SPI_ACCEL_CS_L	F4	AOP_FUNC[7]	(IPD)	AOP_PDM_DATA1	J1	PDM_DMIC_DATA1 (IN 60)
43	NC_SPI_ALTIMETER_CS_L	E1	AOP_FUNC[8]		AOP_SPI_MOSI	A5	SPI_AOP_SENSOR_MOSI_R (OUT 43)
					AOP_SPI_SCLK	E5	SPI_AOP_SENSOR_CLK_R (OUT 43)
43	NC_I2C_AOP_SCL	H6	AOP_I2C0_SCL		AOP_SPI_MISO	C2	SPI_AOP_SENSOR_MISO (IN 43 84)
43	NC_I2C_AOP_SDA	G6	AOP_I2C0_SDA				

OMIT_TABLE
CRITICAL

U3900
POP-1GB-20NM-M-SCK
FCCSP
TMIB21B0-B7
SYM 5 OF 17
AON

83 46 (IN)	DFR_TOUCH_INT_L	AG6	AON_GPIO00		JTAG_TCK (IPU)	AF6	SWD_SOC_SWCLK (IN 89)
17 (IN)	CPU_SMC_THRMTRIP_L	AB6	AON_GPIO01	(IPU)	JTAG_TMS (IPU)	AH1	SWD_SOC_SWDIO (BI 89)
43	NC_SMC_GFX_SELF_THROTTLE	AL1	AON_GPIO02		JTAG_TDI (IPU)	AE6	DEBUG_JTAG_SOC_TDI (IN 83)
43	NC_SMC_TOPBLK_SWP_L	AH5	AON_GPIO03		JTAG_TDO	AK1	DEBUG_JTAG_SOC_TDO (OUT 83)
16 (IN)	XDP_PRESENT_L	AG1	AON_GPIO04		(IPD) JTAG_TRST*	AH6	TP_JTAG_SOC_TRST_L (83)
57 (OUT)	CODEC_RESET_L	AL4	AON_GPIO05		JTAG_SEL	Y8	SOC_JTAG_SEL (DAP=0, TAP=1) (35)
(OUT)	NC_BT_DEV_WAKE	AK4	AON_GPIO06				
43	NC_PCIEDN_WAKE_L	AD6	AON_GPIO07		DOCK_CONNECT	AJ5	SOC_DOCK_CONNECT (IN 28 29 35 83)
43	NC_ENET_LOW_PWR	AM1	AON_GPIO08		AON_SWD0_TMS	AF2	NC_SOC_WLAN_JTAG_TMS (43)
62 (IN)	TPAD_SPI_INT_L	AJ6	AON_GPIO09		AON_SWD1_TMS	AE4	NC_MESA_MENUKEY_L (43)
43	NC_SDCONN_STATE_CHANGE_L	AK5	AON_GPIO10		AON_SWD01_TCK	AE5	NC_SOC_WLAN_JTAG_TCK (43)
43	NC_ENET_MEDIA_SENSE	AJ1	AON_GPIO11				
72 (IN)	PMU_INT_L	AL6	AON_GPIO12	(IPU)	WDOG	AF5	SOC_WDOG (OUT 72 83 85)
					AON_SLEEP1_RESET*	AC6	AON_SLEEP1_RESET_L (OUT 34)
			AON_SPMI_SCLK				
			AON_SPMI_SDATA				
	SPMI_CLK R4036 20 1 2 5% 1/20W MF 201	AA6	RT_CLK32768				
	SPMI_DATA R4037 20 1 2 5% 1/20W MF 201	AK2					
83 72 (IN)	PMU_CLK32K_SOC	AK6					
83	SOC_COLD_RESET_L	AG4	COLD_RESET*				
85 83 72 60 (IN)	PMU_COLD_RESET_L	AF4	CFSB_AON				

PLACE_NEAR=U3900.AA6:5MM
PLACE_NEAR=U7800.M7:5MM

R4039 1 2 4.7K 5% 1/20W MF 201

COLD_RESET and CFSB_AON requires isolation per <rdar://30222445>

OMIT_TABLE
CRITICAL

U3900
POP-1GB-20NM-M-SCK
FCCSP
TMIB21B0-B7
SYM 9 OF 17
SMC

PLACE_NEAR=U3900.R4:5MM
PLACE_NEAR=U3900.R1:5MM
PLACE_NEAR=U3900.T5:5MM
PLACE_NEAR=U3900.T6:5MM

12 (BI)	ESPI_IO<0> R4050 20 1 2 5% 1/20W MF 201	R4	ESPI_IO_R<0>	SMC_ESPI_IO0		SMC_GPIO0 V4	CODEC_WAKE_L (IN 57)
12 (BI)	ESPI_IO<1> R4051 20 1 2 5% 1/20W MF 201	R1	ESPI_IO_R<1>	SMC_ESPI_IO1	(IPD)	SMC_GPIO1 V8	NC_BT_HOST_WAKE (IN)
12 (BI)	ESPI_IO<2> R4052 20 1 2 5% 1/20W MF 201	T5	ESPI_IO_R<2>	SMC_ESPI_IO2	(IPD)	SMC_GPIO2 V6	WLBT_HOST_WAKE (IN 32 33)
12 (BI)	ESPI_IO<3> R4053 20 1 2 5% 1/20W MF 201	T6	ESPI_IO_R<3>	SMC_ESPI_IO3		SMC_GPIO3 U4	DP_INT_HPD_MASK (OUT 13 43)
		P2	ESPI_CLK60M	SMC_ESPI_CLK	(IPD)	SMC_GPIO4 V7	SMC_LID_RIGHT (IN 43 83)
12 (IN)			ESPI_CS_L	SMC_ESPI_CS*		SMC_GPIO5 U6	NC_PCC_EVENT (43)
12 (IN)		T4	ESPI_RESET_L	SMC_ESPI_RESET*	(IPD)	SMC_GPIO6 V1	NC_TPAD_VIBE_L (43)
12 (IN)		T2				SMC_GPIO7 W5	TPAD_KBD_WAKE_L (IN 62 83)
42 (IN)	SMC_PECI_RX	M6		SMC_PECI_IN	(IPD)	SMC_GPIO8 AC1	SMC_LID_LEFT (IN 43 83)
42 (OUT)	SMC_PECI_TX	R6		SMC_PECI_OUT		SMC_GPIO9 AB2	NC_SPI_DESCRIPTOR_OVERRIDE_L (43)
42 (OUT)	SMC_PCH_PWROK	U7		PCH_PWROK		SMC_GPIO10 AB1	NC_DISP_GCON_INT_L (43)
42 (OUT)	SMC_PCH_SYS_PWROK	U8		SYS_PWROK		SMC_GPIO11 AA4	NC_PCH_GCON_INT_L (43)
42 18 (OUT)	SMC_RSMRST_L	U1		RSMRST*		SMC_GPIO12 W8	TPAD_ACTUATOR_DISABLE_L (BI 62)
83 42 (OUT)	SMC_SYSRST_L	U5		SYS_RESET*	(IPU)	SMC_GPIO13 AA1	TBT_WAKE_L (IN 27)
					(IPU)	SMC_GPIO14 AC2	UPC_I2C_INT_L (IN 27 28 29 47)
89 83 72 18 (IN)	PM_SLP_S0_L	W1		SLP_S0B	(IPU)	SMC_GPIO_15 K2	DP_INT_HPD_L (IN 43)
65 43 42 (BI)	SMC_PROCHOT_L	P6		PROCHOT*			
85 83 82 81 72 34 (IN)	PMU_SYS_ALIVE	W6		SYS_ALIVE		SMC_ADC0 AE1	SMC_CPU_HS_ISENSE (IN 49)
						SMC_ADC1 Y5	SMC_PBUS_VSENSE (IN 49)
83 47 29 27 (OUT)	I2C_UPC_SCL	K4		SMC_I2C0_SCL		SMC_ADC2 AE2	SMC_BMON_ISENSE (IN 49)
83 47 29 27 (BI)	I2C_UPC_SDA	H1		SMC_I2C0_SDA		SMC_ADC3 AB5	SMC_DCIN_ISENSE (IN 49)
						SMC_ADC4 Y7	SMC_DCIN_VSENSE (IN 49)
47 (OUT)	I2C_SNS0_S0_SCL	L4		SMC_I2C1_SCL		SMC_ADC5 AD4	SMC_PP3V3_WLANBT_ISENSE (IN 50)
47 (BI)	I2C_SNS0_S0_SDA	L5		SMC_I2C1_SDA		SMC_ADC6 AF1	SMC_PP1V8_WLANBT_ISENSE (IN 51)
						SMC_ADC7 Y6	SMC_CALPE_ISENSE (IN 52)
47 (OUT)	I2C_THMSNS_SCL	M4		SMC_I2C2_SCL			
47 (BI)	I2C_THMSNS_SDA	K1		SMC_I2C2_SDA		REFP_ADC AC5	PP1V25_SLPS2R_SMC_AVREF (42)
						REFM_ADC AC4	GND_SMC_AVSS (42 49 50 51 52)
47 (OUT)	I2C_DISP_SCL	L2		SMC_I2C3_SCL			
47 (BI)	I2C_DISP_SDA	P5		SMC_I2C3_SDA		SMC_PWM0 E2	SMC_FAN_0_PWM (OUT 55)
						SMC_TACH0 K6	SMC_FAN_0_TACH (IN 55 60)
83 72 47 (OUT)	I2C_PWR_SCL	L1		SMC_I2C4_SCL			
83 72 47 (BI)	I2C_PWR_SDA	M1		SMC_I2C4_SDA		SMC_PWM1 N5	NC_SMC_FAN_1_PWM (43)
						SMC_TACH1 L6	NC_SMC_FAN_1_TACH (43)
47 (OUT)	I2C_SENSE_SCL	N1		SMC_I2C5_SCL			
47 (BI)	I2C_SENSE_SDA	N2		SMC_I2C5_SDA		SMC_PWM2 K5	NC_SMC_LED_ONEWIRE (43)
81 47 (OUT)	I2C_SSD_SCL	P1		SMC_I2C6_SCL	(IPU)	SMC_UART0_RXD U2	SMC_DEBUGPRT_RX (IN 83 89)
81 47 (BI)	I2C_SSD_SDA	P4		SMC_I2C6_SDA		SMC_UART0_TXD T1	SMC_DEBUGPRT_TX (OUT 83 89)
						SWD_OUT0_TCK AB4	SSD0_SWCLK (OUT 77 78 79 80 82)
						SWD_OUT0_TMS Y1	SSD0_SWDIO (BI 77 78 79 80 82)
						SWD_OUT1_TCK AD1	NC_SSD1_SWCLK_UART_R2D (43)
						SWD_OUT1_TMS W7	NC_SSD1_SWDIO_UART_D2R (43)

PLACE_NEAR=U3900.AC4:4MM
XW4089
SM

R4046 10K 1 2
R4047 100K 1 2 5% 1/20W MF 201
SOC_JTAG_SEL (35)
SOC_DOCK_CONNECT (28 29 35 83)

BOM_COST_GROUP=SOC

PAGE TITLE	SOC AOP/AON/SMC
Apple Inc.	DRAWING NUMBER 051-05309 / SIZE D
	REVISION 6.0.0
	BRANCH pvt
	PAGE 40 OF 500
	SHEET 35 OF 98

NOTICE OF PROPRIETARY PROPERTY:
THE INFORMATION CONTAINED HEREIN IS THE PROPRIETARY PROPERTY OF APPLE INC.
THE POSESSOR AGREES TO THE FOLLOWING:
I TO MAINTAIN THIS DOCUMENT IN CONFIDENCE
II NOT TO REPRODUCE OR COPY IT
III NOT TO REVEAL OR PUBLISH IT IN WHOLE OR PART
IV ALL RIGHTS RESERVED

OMIT_TABLE
CRITICAL

U3900
POP-1GB-20NM-M-SCK
FCCSP
TMIB21B0-B7
SYM 4 OF 17
ISP

84 76 IN	MIPI_FTCAM_DATA_P<0>	B24	MIPI0C_DATA0_P		ISP_I2C0_SDA	AC28	I2C_FTCAM_SDA — B1 48
84 76 IN	MIPI_FTCAM_DATA_N<0>	A24	MIPI0C_DATA0_N		ISP_I2C0_SCL	AD33	I2C_FTCAM_SCL — OUT 48
		B22	MIPI0C_DATA1_P		ISP_I2C1_SDA	AA29	NC_I2C_PLCAM_SDA — 43
		A22	MIPI0C_DATA1_N		ISP_I2C1_SCL	AD30	NC_I2C_PLCAM_SCL — 43
84 76 IN	MIPI_FTCAM_CLK_P	B23	MIPI0C_CLK_P		SENSOR0_CLK	AF32	NC_FTCAM_CLK12M_R — 43
84 76 IN	MIPI_FTCAM_CLK_N	A23	MIPI0C_CLK_N		SENSOR0_RST	AF30	NC_FTCAM_RESET_L — 43
		B25	MIPI1C_DATA0_P		SENSOR0_ISTRB	AC29	DFR_TOUCH_RESET_L — OUT 46 83
		A25	MIPI1C_DATA0_N		SENSOR1_CLK	AA28	NC_PLCAM_RX_CLK12M_R — 43
		B27	MIPI1C_DATA1_P		SENSOR1_RST	AB30	NC_PLCAM_RX_RESET_L — 43
		A27	MIPI1C_DATA1_N		SENSOR1_ISTRB	AA30	DFR_DISP_RESET_L — OUT 46 83
		B26	MIPI1C_CLK_P		SENSOR2_CLK	AB28	NC_PLCAM_TX_CLK12M_R — 43
		A26	MIPI1C_CLK_N		SENSOR2_RST	AD28	NC_PLCAM_TX_RESET_L — 43
					SENSOR_INT	W28	NC_PLCAM_TX_INT — 43
46 OUT	MIPI_DFR_DATA_P	B30	MIPID_DATA0_P	(IPD)	DISP_TE	D33	DFR_DISP_TE — IN 46 83
46 OUT	MIPI_DFR_DATA_N	A30	MIPID_DATA0_N		DISP_VSYNC	L30	BOARD_REV2 — IN 42
46 OUT	MIPI_DFR_CLK_P	B29	MIPID_CLK_P		CLK32K_OUT	AF29	DFR_TOUCH_CLK32K_RESET_L — OUT 46 83
46 OUT	MIPI_DFR_CLK_N	A29	MIPID_CLK_N				
	SOC_MIPI0C_REXT	F23	MIPI0C_REXT				
	SOC_MIPI1C_REXT	F25	MIPI1C_REXT				
	SOC_MIPID_REXT	F26	MIPID_REXT				

[1]R4100 4.02K 1% 1/20W MF 201 — 2
[1]R4101 4.02K 1% 1/20W MF 201 — 2
[1]R4102 4.02K 1% 1/20W MF 201 — 2

PLACE_NEAR=U3900.F23:5MM
PLACE_NEAR=U3900.F25:5MM
PLACE_NEAR=U3900.F26:5MM

OMIT_TABLE
CRITICAL

U3900
POP-1GB-20NM-M-SCK
FCCSP
TMIB21B0-B7
SYM 2 OF 17
I2C/UART/SPI/I2S

58 48 B1	I2C_SPKRAMP_L_SDA	W33	I2C0_SDA		SPI0_MISO	AN6	SPI_SOCROM_MISO — IN 42
58 48 OUT	I2C_SPKRAMP_L_SCL	U30	I2C0_SCL		SPI0_MOSI	AM4	SPI_SOCROM_MOSI_R — R4171 20 1 2 — SPI_SOCROM_MOSI — OUT 42
59 48 B1	I2C_SPKRAMP_R_SDA	AB32	I2C1_SDA		SPI0_SCLK	AN3	SPI_SOCROM_CLK_R — R4172 20 1 2 5% 1/20W MF 201 — SPI_SOCROM_CLK — OUT 42
59 48 OUT	I2C_SPKRAMP_R_SCL	V30	I2C1_SCL		SPI0_SSIN	AP6	SPI_SOCROM_CS_L — OUT 42
57 48 B1	I2C_CODEC_SDA	H30	I2C2_SDA	(IPU)	SPI1_MISO	K30	SPI_TPAD_MISO — IN 42 43
57 48 OUT	I2C_CODEC_SCL	P28	I2C2_SCL		SPI1_MOSI	J30	SPI_TPAD_MOSI_R — OUT 43
48 B1	I2C_ALS_SDA	V28	I2C3_SDA		SPI1_SCLK	K33	SPI_TPAD_CLK_R — OUT 43
48 OUT	I2C_ALS_SCL	AB33	I2C3_SCL		SPI1_SSIN	R28	SPI_TPAD_CS_L — OUT 62
48 B1	I2C_DFR_SDA	L33	I2C4_SDA		SPI2_MISO	B17	SPI_MESA_MISO — IN 44
48 OUT	I2C_DFR_SCL	R29	I2C4_SCL		SPI2_MOSI	C17	SPI_MESA_MOSI_R — OUT 43
43	NC_I2C_SOC_5_SDA	M29	I2C5_SDA		SPI2_SCLK	D16	SPI_MESA_CLK_R — OUT 43
43	NC_I2C_SOC_5_SCL	R30	I2C5_SCL		SPI2_SSIN	A17	WLAN_THROTTLE — OUT 32 33
83 59 IN	SPKR_ID1	J33	I2C6_SDA	(IPU)	SPI3_MISO	C14	SPI_DFR_MISO — IN 43
83 58 IN	SPKR_ID0	L29	I2C6_SCL	(IPU)	SPI3_MOSI	D15	SPI_DFR_MOSI_R — OUT 43
83	SOC_DEBUGPRT_RX	V32	UART0_RXD	(IPU)	SPI3_SCLK	C16	SPI_DFR_CLK_R — OUT 43
83	SOC_DEBUGPRT_TX	U32	UART0_TXD		SPI3_SSIN	A16	SPI_DFR_CS_L — OUT 46 83
45 IN	UART_SE_D2R	B15	UART1_RXD	(IPD)	I2S0_DIN	Y28	I2S_SPKRAMP_L_D2R — IN 58 59
45 OUT	UART_SE_R2D	A15	UART1_TXD		I2S0_DOUT	AC32	I2S_SPKRAMP_L_R2D_R — OUT 43
45 IN	UART_SE_D2R_CTS_L	D13	UART1_CTS*		I2S0_BCLK	Y29	I2S_SPKRAMP_L_BCLK_R — OUT 43
45 OUT	UART_SE_R2D_RTS_L	E12	UART1_RTS*		I2S0_LRCK	AE32	I2S_SPKRAMP_L_LRCLK — OUT 43
43	NC_UART_BT_D2R	F32	UART2_RXD		I2S0_MCK	AM33	NC_DFR_TOUCH_RSVD — 43
43	NC_UART_BT_R2D	F30	UART2_TXD		I2S1_DIN	C18	I2S_SPKRAMP_R_D2R — IN 43
43	NC_UART_BT_D2R_CTS_L	M28	UART2_CTS*		I2S1_DOUT	E17	I2S_SPKRAMP_R_R2D_R — OUT 43
43	NC_UART_BT_R2D_RTS_L	K28	UART2_RTS*		I2S1_BCLK	D17	I2S_SPKRAMP_R_BCLK_R — OUT 43
32 IN	UART_BT_LH_D2R	H32	UART3_RXD		I2S1_LRCK	B18	I2S_SPKRAMP_R_LRCLK — OUT 43
32 OUT	UART_BT_LH_R2D	J32	UART3_TXD		I2S1_MCK	D18	NC_PCHROM_SW_EN — 43
43	NC_UART_GNSS_D2R_CTS_L	H33	UART3_CTS*	(IPD)	I2S2_DIN	Y33	I2S_CODEC_D2R — IN 57
43	NC_UART_GNSS_R2D_RTS_L	P30	UART3_RTS*		I2S2_DOUT	AA33	I2S_CODEC_R2D_R — OUT 43
43 32 IN	UART_WLAN_D2R	B14	UART4_RXD		I2S2_BCLK	AE33	I2S_CODEC_BCLK_R — OUT 43
32 OUT	UART_WLAN_R2D	A14	UART4_TXD		I2S2_LRCK	V29	I2S_CODEC_LRCLK — OUT 43
43 32 IN	UART_WLAN_D2R_CTS_L	C13	UART4_CTS*		I2S2_MCK	AL30	NC_I2S_CODEC_MCLK — 43
32 OUT	UART_WLAN_R2D_RTS_L	D12	UART4_RTS*		I2S3_DIN	R32	NC_I2S_HAWKING_D2R — 43
					I2S3_DOUT	U33	NC_I2S_CODEC1_R2D_R — 43
					I2S3_BCLK	T33	NC_I2S_HAWKING_BCLK_R — 43
					I2S3_LRCK	U29	NC_I2S_HAWKING_LRCLK — 43
					I2S3_MCK	V33	NC_I2S_CODEC1_MCLK — 43

BOM_COST_GROUP=SOC

PAGE TITLE: SOC ISP/I2C/UART/SPI/I2S

Apple Inc.

DRAWING NUMBER: 051-05309 — SIZE: D
REVISION: 6.0.0
BRANCH: pvt
PAGE: 41 OF 500
SHEET: 36 OF 98

NOTICE OF PROPRIETARY PROPERTY:
THE INFORMATION CONTAINED HEREIN IS THE PROPRIETARY PROPERTY OF APPLE INC.
THE POSESSOR AGREES TO THE FOLLOWING:
I TO MAINTAIN THIS DOCUMENT IN CONFIDENCE
II NOT TO REPRODUCE OR COPY IT
III NOT TO REVEAL OR PUBLISH IT IN WHOLE OR PART
IV ALL RIGHTS RESERVED

OMIT_TABLE
CRITICAL

U3900
POP-1GB-20NM-M-SCK
FCCSP
TMIB21B0-B7
SYM 1 OF 17
PCIE UP/DN

14 OUT	PCIE SOC D2R P<0>	C4210 0.22UF 20% 6.3V X5R 0201	PCIE SOC D2R C P<0>	B10 PCIE_UP_TX0_P
14 OUT	PCIE SOC D2R N<0>	C4211 0.22UF 20% 6.3V X5R 0201	PCIE SOC D2R C N<0>	C10 PCIE_UP_TX0_N
			43 IN PCIE SOC R2D P<0>	E10 PCIE_UP_RX0_P
			43 IN PCIE SOC R2D N<0>	F10 PCIE_UP_RX0_N
14 OUT	PCIE SOC D2R P<1>	C4212 0.22UF 20% 6.3V X5R 0201	PCIE SOC D2R C P<1>	A9 PCIE_UP_TX1_P
14 OUT	PCIE SOC D2R N<1>	C4213 0.22UF 20% 6.3V X5R 0201	PCIE SOC D2R C N<1>	B9 PCIE_UP_TX1_N
			43 IN PCIE SOC R2D P<1>	D9 PCIE_UP_RX1_P
			43 IN PCIE SOC R2D N<1>	E9 PCIE_UP_RX1_N
14 OUT	PCIE SOC D2R P<2>	C4214 0.22UF 20% 6.3V X5R 0201	PCIE SOC D2R C P<2>	B8 PCIE_UP_TX2_P
14 OUT	PCIE SOC D2R N<2>	C4215 0.22UF 20% 6.3V X5R 0201	PCIE SOC D2R C N<2>	C8 PCIE_UP_TX2_N
			43 IN PCIE SOC R2D P<2>	E8 PCIE_UP_RX2_P
			43 IN PCIE SOC R2D N<2>	F8 PCIE_UP_RX2_N
14 OUT	PCIE SOC D2R P<3>	C4216 0.22UF 20% 6.3V X5R 0201	PCIE SOC D2R C P<3>	A7 PCIE_UP_TX3_P
14 OUT	PCIE SOC D2R N<3>	C4217 0.22UF 20% 6.3V X5R 0201	PCIE SOC D2R C N<3>	B7 PCIE_UP_TX3_N
			43 IN PCIE SOC R2D P<3>	D7 PCIE_UP_RX3_P
			43 IN PCIE SOC R2D N<3>	E7 PCIE_UP_RX3_N
14 OUT	SOC CLKREQ L	R4218 1K 5% 1/20W MF 201	SOC CLKREQ R L	A18 PCIE_UP_CLKREQ*
			84 14 IN PCIE CLK100M SOC P	G12 PCIE_UP_EXT_REFCLK_P
			84 14 IN PCIE CLK100M SOC N	G11 PCIE_UP_EXT_REFCLK_N
			SOC PCIE UP REXT	G10 PCIE_UP_REXT

PLACE_NEAR=U3900.G10:5MM
R4200 3.01K 1% 1/20W MF 201

PCIE_DN_TX0_P	AP28	NC PCIE WLAN R2D C P	43
PCIE_DN_TX0_N	AN28	NC PCIE WLAN R2D C N	43
PCIE_DN_RX0_P	AL28	NC PCIE WLAN D2R P	43
PCIE_DN_RX0_N	AK28	NC PCIE WLAN D2R N	43
PCIE_DN_TX1_P	AN27	NC PCIE ENET R2D C P	43
PCIE_DN_TX1_N	AM27	NC PCIE ENET R2D C N	43
PCIE_DN_RX1_P	AK27	NC PCIE ENET D2R P	43
PCIE_DN_RX1_N	AJ27	NC PCIE ENET D2R N	43
PCIE_DN_TX2_P	AP26	NC PCIE DN2 R2D C P	43
PCIE_DN_TX2_N	AN26	NC PCIE DN2 R2D C N	43
PCIE_DN_RX2_P	AL26	NC PCIE DN2 D2R P	43
PCIE_DN_RX2_N	AK26	NC PCIE DN2 D2R N	43
PCIE_DN_TX3_P	AN25	NC PCIE DN3 R2D C P	43
PCIE_DN_TX3_N	AM25	NC PCIE DN3 R2D C N	43
PCIE_DN_RX3_P	AK25	NC PCIE DN3 D2R P	43
PCIE_DN_RX3_N	AJ25	NC PCIE DN3 D2R N	43
PCIE_DN_REFCLK0_P	AK23	NC PCIE CLK100M WLAN P	43
PCIE_DN_REFCLK0_N	AL23	NC PCIE CLK100M WLAN N	43
PCIE_DN_CLKREQ0*	AG29	NC WLAN CLKREQ L	43
PCIE_DN_PERST0*	AJ33	NC WLAN PERST L	43
PCIE_DN_REFCLK1_P	AJ22	NC PCIE CLK100M ENET P	43
PCIE_DN_REFCLK1_N	AK22	NC PCIE CLK100M ENET N	43
PCIE_DN_CLKREQ1*	AG30	ENET CLKREQ L	37
PCIE_DN_PERST1*	AG33	NC ENET RESET L	43
PCIE_DN_REFCLK2_P	AN23	NC PCIE CLK100M DN2 P	43
PCIE_DN_REFCLK2_N	AP23	NC PCIE CLK100M DN2 N	43
PCIE_DN_CLKREQ2*	AD29	NC PCIEDN2 CLKREQ L	43
PCIE_DN_PERST2*	AH29	NC PCIEDN2 RESET L	43
PCIE_DN_REFCLK3_P	AM22	NC PCIE CLK100M DN3 P	43
PCIE_DN_REFCLK3_N	AN22	NC PCIE CLK100M DN3 N	43
PCIE_DN_CLKREQ3*	AF33	NC PCIEDN3 CLKREQ L	43
PCIE_DN_PERST3*	AE30	NC PCIEDN3 RESET L	43
PCIE_DN_EXT_REFCLK_P	AH25		
PCIE_DN_EXT_REFCLK_N	AH24		
PCIE_DN_REXT	AH23	SOC PCIE DN REXT	

(UID_MODE strap on A00)

PLACE_NEAR=U3900.AH23:5MM
R4201 3.01K 1% 1/20W MF 201

OMIT_TABLE
CRITICAL

U3900
POP-1GB-20NM-M-SCK
FCCSP
TMIB21B0-B7
SYM 8 OF 17
PCIE STG 0/1

77 OUT	PCIE SSD0 R2D C P<0>	AN8	PCIE_STG0_TX0_P
77 OUT	PCIE SSD0 R2D C N<0>	AM8	PCIE_STG0_TX0_N
84 77 IN	PCIE SSD0 D2R P<0>	AK8	PCIE_STG0_RX0_P
84 77 IN	PCIE SSD0 D2R N<0>	AJ8	PCIE_STG0_RX0_N
78 OUT	PCIE SSD0 R2D C P<1>	AP9	PCIE_STG0_TX1_P
78 OUT	PCIE SSD0 R2D C N<1>	AN9	PCIE_STG0_TX1_N
78 IN	PCIE SSD0 D2R P<1>	AL9	PCIE_STG0_RX1_P
78 IN	PCIE SSD0 D2R N<1>	AK9	PCIE_STG0_RX1_N
79 OUT	PCIE SSD0 R2D C P<2>	AN10	PCIE_STG0_TX2_P
79 OUT	PCIE SSD0 R2D C N<2>	AM10	PCIE_STG0_TX2_N
79 IN	PCIE SSD0 D2R P<2>	AK10	PCIE_STG0_RX2_P
79 IN	PCIE SSD0 D2R N<2>	AJ10	PCIE_STG0_RX2_N
80 OUT	PCIE SSD0 R2D C P<3>	AP11	PCIE_STG0_TX3_P
80 OUT	PCIE SSD0 R2D C N<3>	AN11	PCIE_STG0_TX3_N
80 IN	PCIE SSD0 D2R P<3>	AL11	PCIE_STG0_RX3_P
80 IN	PCIE SSD0 D2R N<3>	AK11	PCIE_STG0_RX3_N
84 78 77 OUT	PCIE CLK100M SSD0 01 P	AK18	PCIE_STG0_REFCLK01_P
84 78 77 OUT	PCIE CLK100M SSD0 01 N	AL18	PCIE_STG0_REFCLK01_N
77 43 IN	SSD0 CLKREQ0 L	AM30	PCIE_STG0_CLKREQ0*
78 43 IN	SSD0 CLKREQ1 L	AK30	PCIE_STG0_CLKREQ1*
84 80 79 OUT	PCIE CLK100M SSD0 23 P	AJ19	PCIE_STG0_REFCLK23_P
84 80 79 OUT	PCIE CLK100M SSD0 23 N	AK19	PCIE_STG0_REFCLK23_N
79 43 IN	SSD0 CLKREQ2 L	AL33	PCIE_STG0_CLKREQ2*
80 43 IN	SSD0 CLKREQ3 L	AK33	PCIE_STG0_CLKREQ3*
80 79 78 77 43 OUT	SSD0 PCIE RESET L	AM32	PCIE_STG0_PERST*
43 OUT	SSD0 CLK24M R	AM6	PCIE_STG0_NANDCLK
		AH12	PCIE_STG0_EXT_REFCLK_P
		AH13	PCIE_STG0_EXT_REFCLK_N
	SOC PCIE STG0 REXT	AH14	PCIE_STG0_REXT

PCIE_STG1_TX0_P	AN13	NC PCIE SSD1 R2D C P<0>	43
PCIE_STG1_TX0_N	AM13	NC PCIE SSD1 R2D C N<0>	43
PCIE_STG1_RX0_P	AK13	NC PCIE SSD1 D2R P<0>	43
PCIE_STG1_RX0_N	AJ13	NC PCIE SSD1 D2R N<0>	43
PCIE_STG1_TX1_P	AP14	NC PCIE SSD1 R2D C P<1>	43
PCIE_STG1_TX1_N	AN14	NC PCIE SSD1 R2D C N<1>	43
PCIE_STG1_RX1_P	AL14	NC PCIE SSD1 D2R P<1>	43
PCIE_STG1_RX1_N	AK14	NC PCIE SSD1 D2R N<1>	43
PCIE_STG1_TX2_P	AN15	NC PCIE SSD1 R2D C P<2>	43
PCIE_STG1_TX2_N	AM15	NC PCIE SSD1 R2D C N<2>	43
PCIE_STG1_RX2_P	AK15	NC PCIE SSD1 D2R P<2>	43
PCIE_STG1_RX2_N	AJ15	NC PCIE SSD1 D2R N<2>	43
PCIE_STG1_TX3_P	AP16	NC PCIE SSD1 R2D C P<3>	43
PCIE_STG1_TX3_N	AN16	NC PCIE SSD1 R2D C N<3>	43
PCIE_STG1_RX3_P	AL16	NC PCIE SSD1 D2R P<3>	43
PCIE_STG1_RX3_N	AK16	NC PCIE SSD1 D2R N<3>	43
PCIE_STG1_REFCLK01_P	AN18	NC PCIE CLK100M SSD1 01 P	43
PCIE_STG1_REFCLK01_N	AP18	NC PCIE CLK100M SSD1 01 N	43
PCIE_STG1_CLKREQ0*	C15	NC SSD1 CLKREQ0 L	43
PCIE_STG1_CLKREQ1*	E15	NC SSD1 CLKREQ1 L	43
PCIE_STG1_REFCLK23_P	AM19	NC PCIE CLK100M SSD1 23 P	43
PCIE_STG1_REFCLK23_N	AN19	NC PCIE CLK100M SSD1 23 N	43
PCIE_STG1_CLKREQ2*	E14	NC SSD1 CLKREQ2 L	43
PCIE_STG1_CLKREQ3*	D14	NC SSD1 CLKREQ3 L	43
PCIE_STG1_PERST*	AK32	NC SSD1 PCIE RESET L	43
PCIE_STG1_NANDCLK	AM2	NC SSD1 CLK24M R	43
PCIE_STG1_EXT_REFCLK_P	AH17		
PCIE_STG1_EXT_REFCLK_N	AH18		
PCIE_STG1_REXT	AH19	SOC PCIE STG1 REXT	

PLACE_NEAR=U3900.AH14:5MM
R4250 3.01K 1% 1/20W MF 201

PLACE_NEAR=U3900.AH19:5MM
R4251 3.01K 1% 1/20W MF 201

PP1V8_AWAKE 27 40 42 43 62 78 72 83
R4232 47K 5% 1/20W MF 201 ENET CLKREQ L 37

BOM_COST_GROUP=SOC

PAGE TITLE
SOC PCIE

Apple Inc.

NOTICE OF PROPRIETARY PROPERTY:
THE INFORMATION CONTAINED HEREIN IS THE PROPRIETARY PROPERTY OF APPLE INC.
THE POSESSOR AGREES TO THE FOLLOWING:
I TO MAINTAIN THIS DOCUMENT IN CONFIDENCE
II NOT TO REPRODUCE OR COPY IT
III NOT TO REVEAL OR PUBLISH IT IN WHOLE OR PART
IV ALL RIGHTS RESERVED

DRAWING NUMBER	051-05309
SIZE	D
REVISION	6.0.0
BRANCH	pvt
PAGE	42 OF 500
SHEET	37 OF 98

Current estimates @ 105C & 2GB from Gibraltar Power Specification Rev 0.5.3

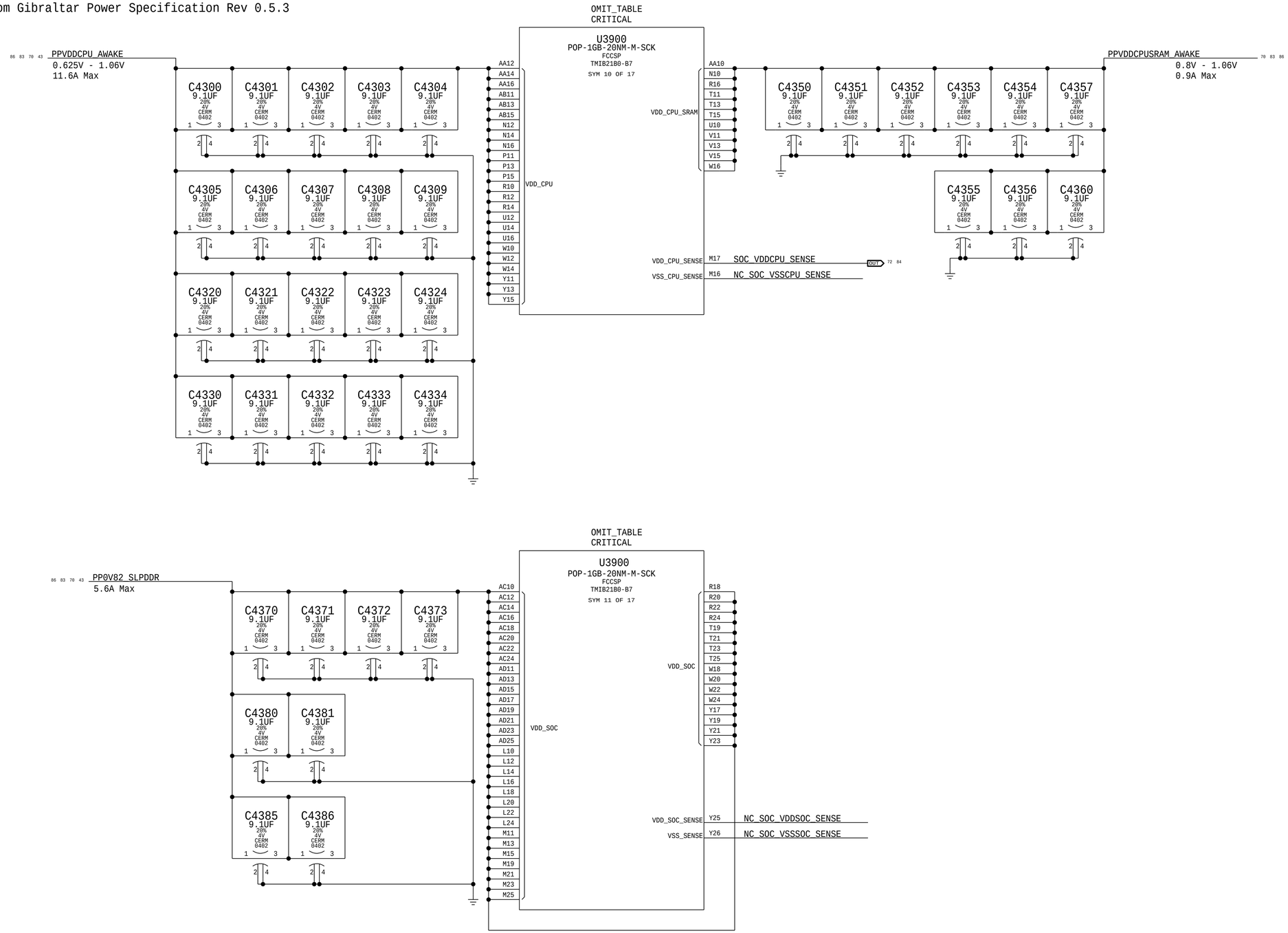

BOM_COST_GROUP=SOC

PAGE TITLE
SOC POWER 1

Apple Inc.

DRAWING NUMBER 051-05309
SIZE D
REVISION 6.0.0
BRANCH pvt
PAGE 43 OF 500
SHEET 38 OF 98

NOTICE OF PROPRIETARY PROPERTY:
THE INFORMATION CONTAINED HEREIN IS THE PROPRIETARY PROPERTY OF APPLE INC.
THE POSESSOR AGREES TO THE FOLLOWING:
I TO MAINTAIN THIS DOCUMENT IN CONFIDENCE
II NOT TO REPRODUCE OR COPY IT
III NOT TO REVEAL OR PUBLISH IT IN WHOLE OR PART
IV ALL RIGHTS RESERVED

Current estimates @ 105C & 2GB from Gibraltar Power Specification Rev 0.5.3

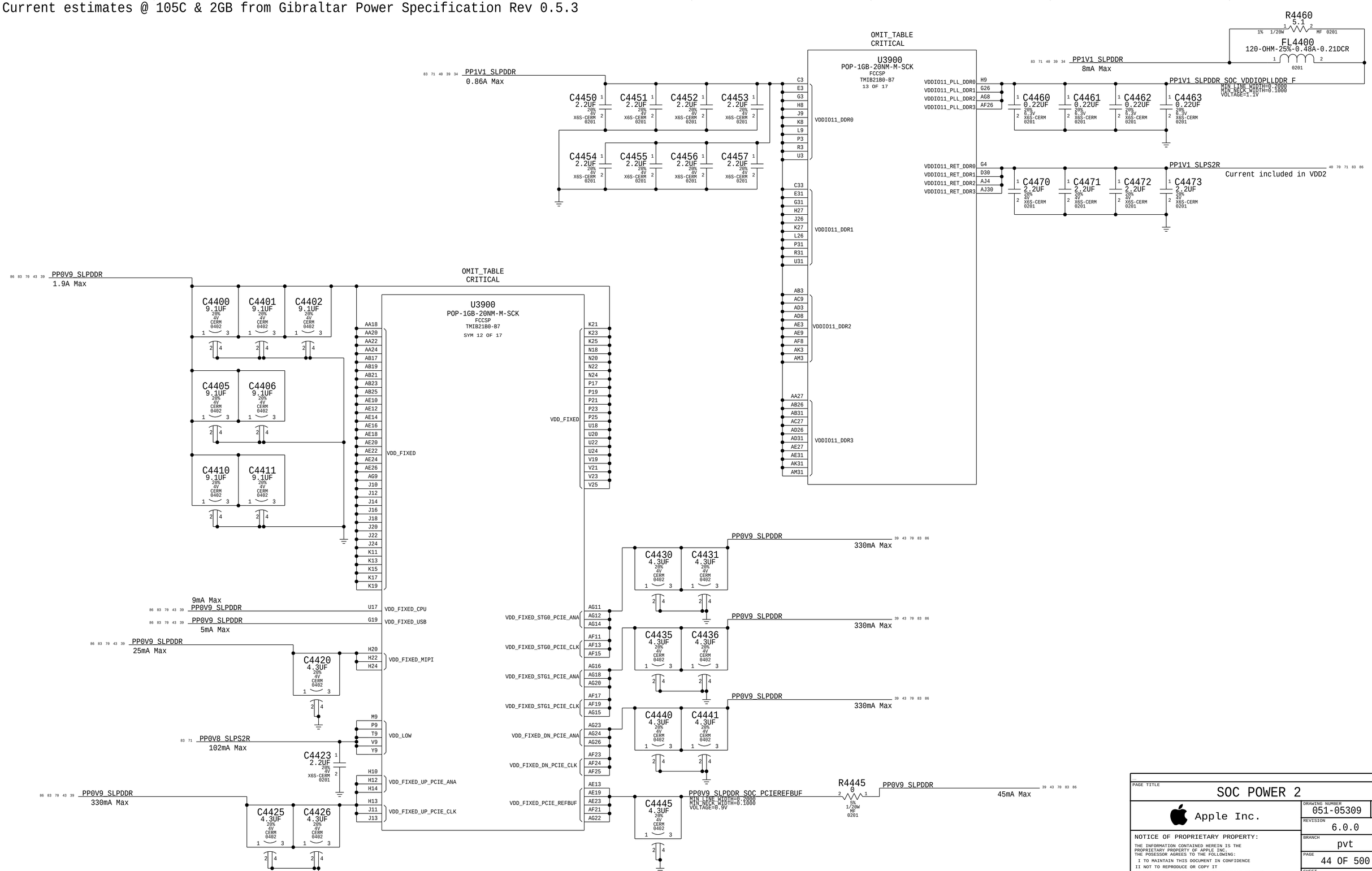

PAGE TITLE
SOC POWER 2

Apple Inc.

DRAWING NUMBER 051-05309 SIZE D
REVISION 6.0.0
BRANCH pvt
PAGE 44 OF 500
SHEET 39 OF 98

NOTICE OF PROPRIETARY PROPERTY:
THE INFORMATION CONTAINED HEREIN IS THE PROPRIETARY PROPERTY OF APPLE INC.
THE POSESSOR AGREES TO THE FOLLOWING:
I TO MAINTAIN THIS DOCUMENT IN CONFIDENCE
II NOT TO REPRODUCE OR COPY IT
III NOT TO REVEAL OR PUBLISH IT IN WHOLE OR PART
IV ALL RIGHTS RESERVED

Current estimates @ 105C & 2GB from Gibraltar Power Specification Rev 0.5.3

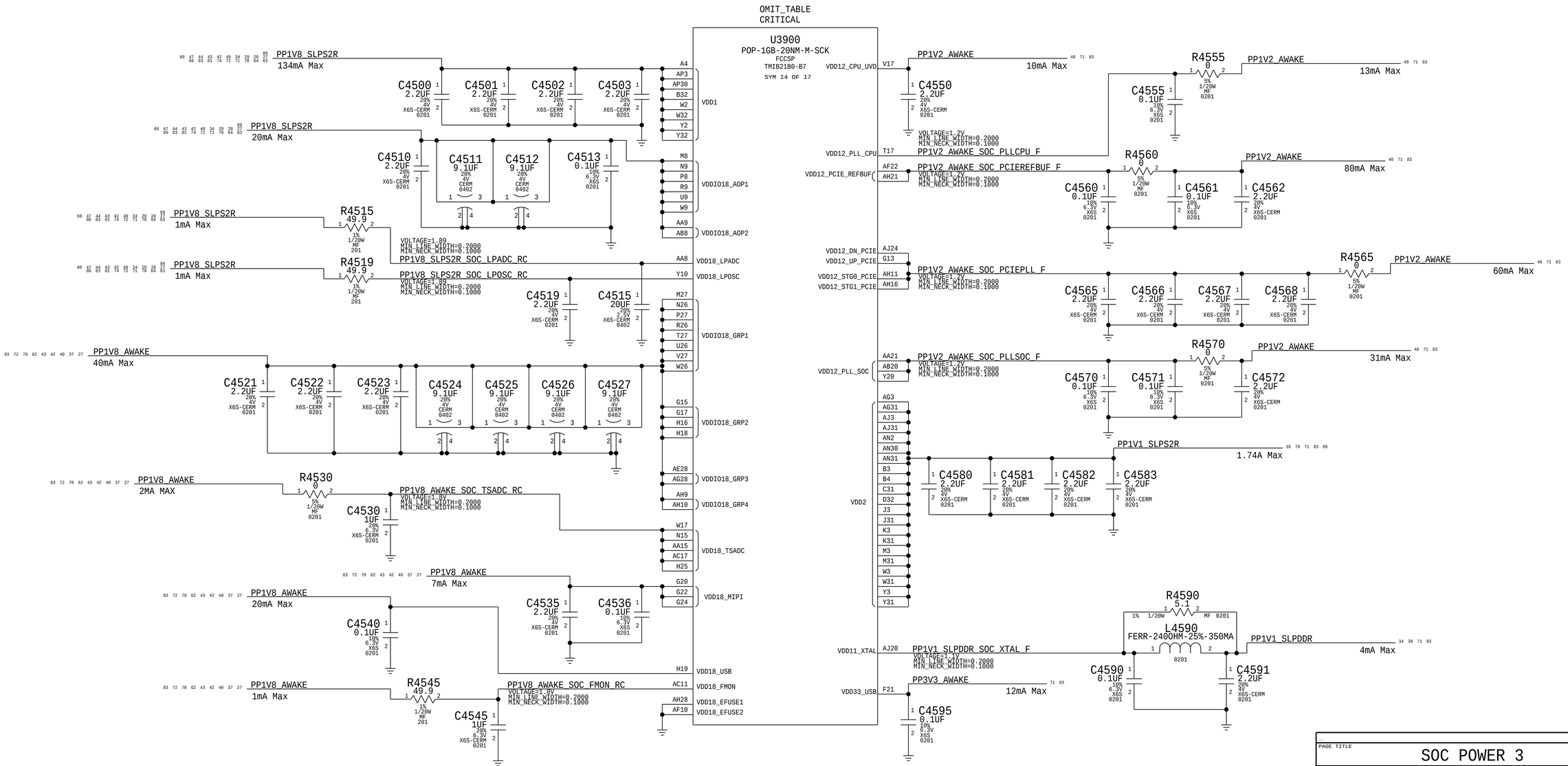

PAGE TITLE
SOC POWER 3

Apple Inc.

DRAWING NUMBER 051-05309
SIZE D
REVISION 6.0.0
BRANCH pvt
PAGE 45 OF 500
SHEET 40 OF 98

NOTICE OF PROPRIETARY PROPERTY:
THE INFORMATION CONTAINED HEREIN IS THE PROPRIETARY PROPERTY OF APPLE INC.
THE POSESSOR AGREES TO THE FOLLOWING:
I TO MAINTAIN THIS DOCUMENT IN CONFIDENCE
II NOT TO REPRODUCE OR COPY IT
III NOT TO REVEAL OR PUBLISH IT IN WHOLE OR PART
IV ALL RIGHTS RESERVED

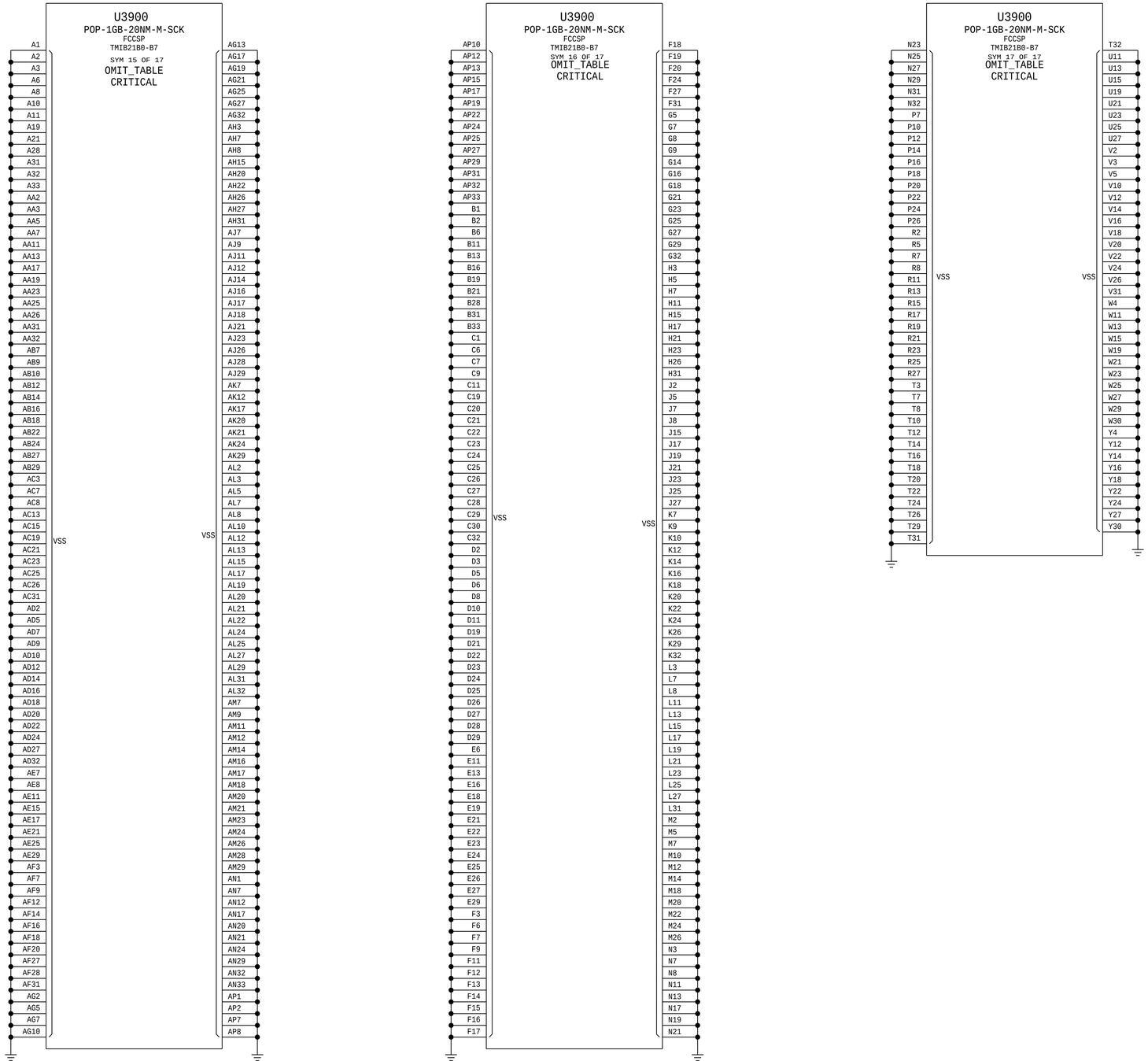

BOM_COST_GROUP=SOC

PAGE TITLE
SOC GROUND

Apple Inc.

DRAWING NUMBER 051-05309 | SIZE D
REVISION 6.0.0
BRANCH pvt
PAGE 46 OF 500
SHEET 41 OF 98

NOTICE OF PROPRIETARY PROPERTY:
THE INFORMATION CONTAINED HEREIN IS THE PROPRIETARY PROPERTY OF APPLE INC.
THE POSESSOR AGREES TO THE FOLLOWING:
I TO MAINTAIN THIS DOCUMENT IN CONFIDENCE
II NOT TO REPRODUCE OR COPY IT
III NOT TO REVEAL OR PUBLISH IT IN WHOLE OR PART
IV ALL RIGHTS RESERVED

Boot Config

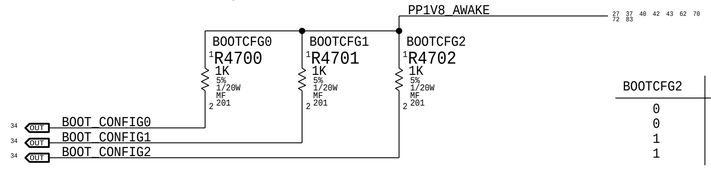

BOOTCFG0	Test Mode
0	Disabled
1	Enabled

BOOTCFG2	BOOTCFG1	Frequency
0	0	40 MHz
0	1	6 MHz
1	0	24 MHz
1	1	Invalid

Board ID

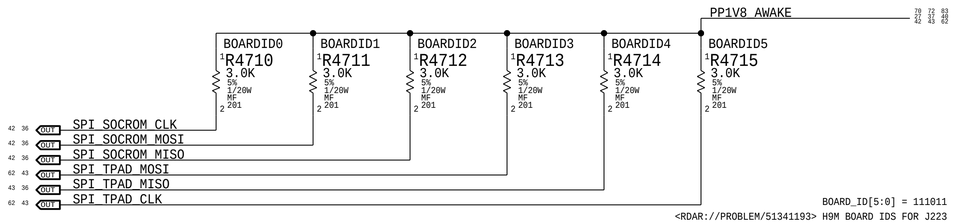

Board Revision

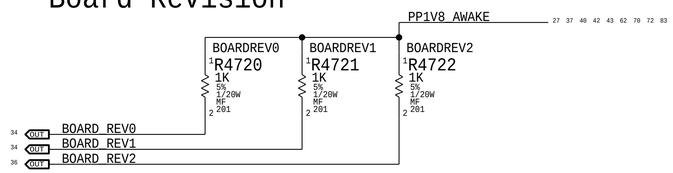

BUILD	BOARDREV <2>	<1>	<0>
PROTO 0	0	0	0
PROTO 0	0	0	1
PROTO 1A	0	1	0
PROTO 1B	0	1	1
EVT	1	0	0
PVT	1	0	1

0=NO_STUFF, 1=STUFF

SEP EEPROM

(Write: 0xA2, Read 0xA3)

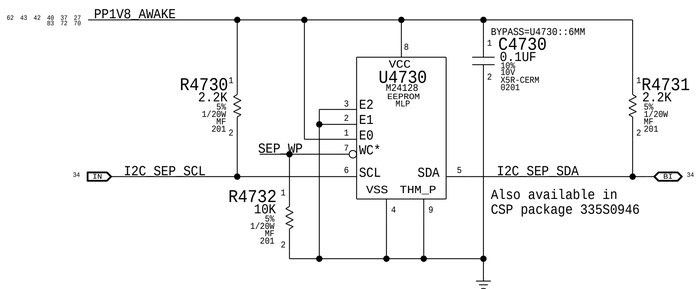

SoC ROM

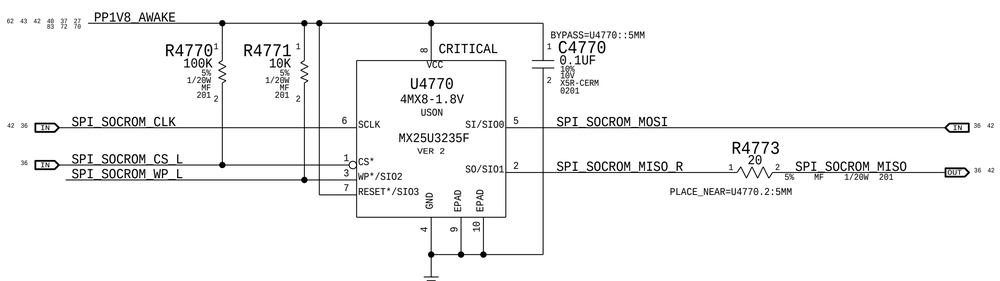

PCH PM Level Shifting

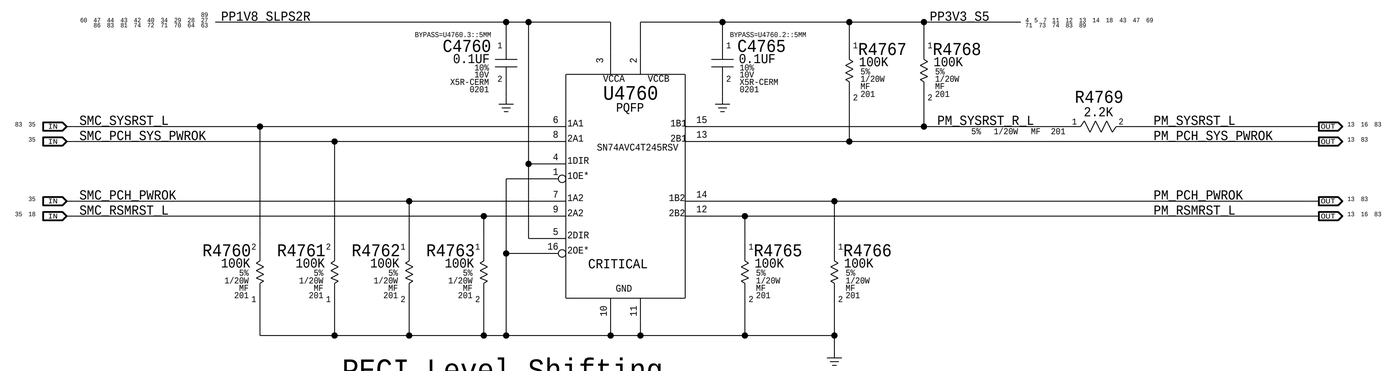

PECI Level Shifting

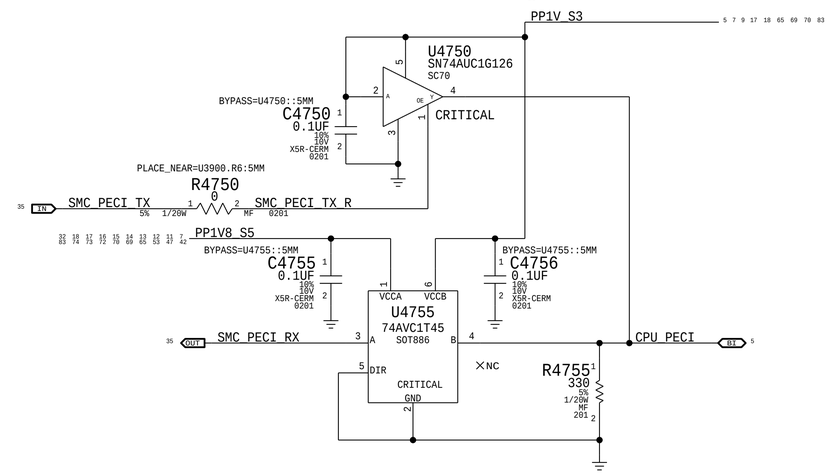

PROCHOT# Level Shifting

rdar://problem/34583713

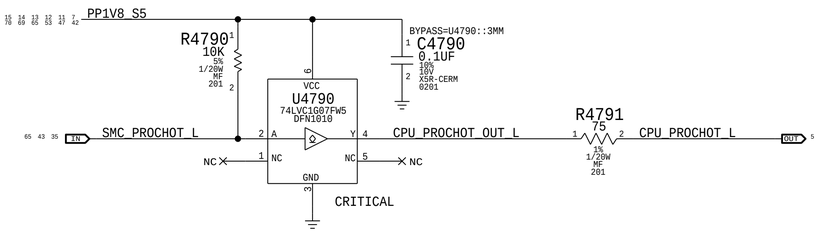

SMC AVREF Supply

Footprint supports 353S01042 alternate

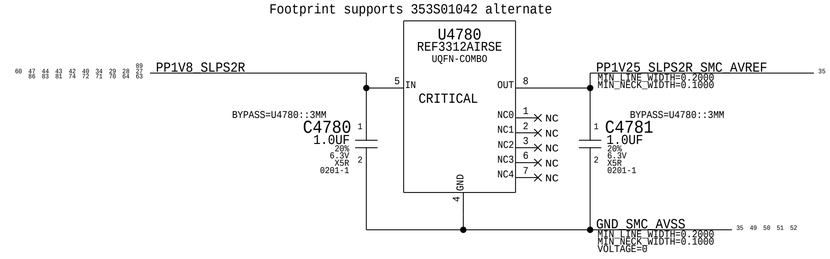

BOM_COST_GROUP=SOC

PAGE TITLE
SOC SHARED SUPPORT

Apple Inc.

NOTICE OF PROPRIETARY PROPERTY:
THE INFORMATION CONTAINED HEREIN IS THE PROPRIETARY PROPERTY OF APPLE INC.
THE POSESSOR AGREES TO THE FOLLOWING:
I TO MAINTAIN THIS DOCUMENT IN CONFIDENCE
II NOT TO REPRODUCE OR COPY IT
III NOT TO REVEAL OR PUBLISH IT IN WHOLE OR PART
IV ALL RIGHTS RESERVED

DRAWING NUMBER	051-05309
SIZE	D
REVISION	6.0.0
BRANCH	pvt
PAGE	47 OF 500
SHEET	42 OF 98

PCIe Up R2D AC Caps

PCIE_SOC_R2D_C_P<0>	C4820	0.22UF	20% 6.3V X5R 0201	PCIE_SOC_R2D_P<0>	37
PCIE_SOC_R2D_C_N<0>	C4821	0.22UF	20% 6.3V X5R 0201	PCIE_SOC_R2D_N<0>	37
PCIE_SOC_R2D_C_P<1>	C4822	0.22UF	20% 6.3V X5R 0201	PCIE_SOC_R2D_P<1>	37
PCIE_SOC_R2D_C_N<1>	C4823	0.22UF	20% 6.3V X5R 0201	PCIE_SOC_R2D_N<1>	37
PCIE_SOC_R2D_C_P<2>	C4824	0.22UF	20% 6.3V X5R 0201	PCIE_SOC_R2D_P<2>	37
PCIE_SOC_R2D_C_N<2>	C4825	0.22UF	20% 6.3V X5R 0201	PCIE_SOC_R2D_N<2>	37
PCIE_SOC_R2D_C_P<3>	C4826	0.22UF	20% 6.3V X5R 0201	PCIE_SOC_R2D_P<3>	37
PCIE_SOC_R2D_C_N<3>	C4827	0.22UF	20% 6.3V X5R 0201	PCIE_SOC_R2D_N<3>	37

GPIO Source Termination

I2S_SPKRAMP_L_R2D_R	R4843	20	PLACE_NEAR=U3900.AC32:5MM 5% 1/20W MF 201	I2S_SPKRAMP_L_R2D	58
I2S_SPKRAMP_L_BCLK_R	R4844	20	PLACE_NEAR=U3900.Y29:5MM 5% 1/20W MF 201	I2S_SPKRAMP_L_BCLK	58
I2S_SPKRAMP_L_LRCLK_R	R4863	20	PLACE_NEAR=U3900.AE32:5MM 5% 1/20W MF 201	I2S_SPKRAMP_L_LRCLK	36
I2S_SPKRAMP_R_R2D_R	R4845	20	PLACE_NEAR=U3900.E17:5MM 5% 1/20W MF 201	I2S_SPKRAMP_R_R2D	59
I2S_SPKRAMP_R_BCLK_R	R4846	20	PLACE_NEAR=U3900.D17:5MM 5% 1/20W MF 201	I2S_SPKRAMP_R_BCLK	59
I2S_SPKRAMP_R_LRCLK_R	R4864	20	PLACE_NEAR=U3900.B18:5MM 5% 1/20W MF 201	I2S_SPKRAMP_R_LRCLK	36
I2S_CODEC_R2D_R	R4847	20	PLACE_NEAR=U3900.AA33:5MM 5% 1/20W MF 201	I2S_CODEC_R2D	57
I2S_CODEC_BCLK_R	R4848	20	PLACE_NEAR=U3900.AE33:5MM 5% 1/20W MF 201	I2S_CODEC_BCLK	57
I2S_CODEC_LRCLK_R	R4865	20	PLACE_NEAR=U3900.V29:5MM 5% 1/20W MF 201	I2S_CODEC_LRCLK	36
SPI_TPAD_MOSI_R	R4851	20	PLACE_NEAR=U3900.J30:5MM 5% 1/20W MF 201	SPI_TPAD_MOSI	42 62
SPI_TPAD_CLK_R	R4852	20	PLACE_NEAR=U3900.K33:5MM 5% 1/20W MF 201	SPI_TPAD_CLK	42 62
SPI_TPAD_MISO_R	R4867	20	PLACE_NEAR=U6860.4:2MM 5% 1/20W MF 201	SPI_TPAD_MISO	36 42
SPI_MESA_MOSI_R	R4853	20	PLACE_NEAR=U3900.A20:5MM 5% 1/20W MF 201	SPI_MESA_MOSI	44
SPI_MESA_CLK_R	R4854	20	PLACE_NEAR=U3900.D16:5MM 5% 1/20W MF 201	SPI_MESA_CLK	44
SPI_DFR_MISO_R	R4866	20	PLACE_NEAR=J5100.7:7MM 5% 1/20W MF 201	SPI_DFR_MISO	36
SPI_DFR_MOSI_R	R4855	20	PLACE_NEAR=U3900.C17:5MM 5% 1/20W MF 201	SPI_DFR_MOSI	46 83
SPI_DFR_CLK_R	R4856	20	PLACE_NEAR=U3900.C16:5MM 5% 1/20W MF 201	SPI_DFR_CLK	46 83
SSD0_CLK24M_R	R4857	0	PLACE_NEAR=U3900.AM6:7MM 5% 1/20W MF 0201	SSD0_CLK24M	43 77 79
PDM_DMIC_CLK0_R	R4859	20	PLACE_NEAR=U3900.N6:5MM 5% 1/20W MF 201	PDM_DMIC_CLK0	60 83
PDM_DMIC_CLK1_R	R4860	20	PLACE_NEAR=U3900.J6:5MM 5% 1/20W MF 201	PDM_DMIC_CLK1	60 83
SPI_AOP_SENSOR_MOSI_R	R4861	20	PLACE_NEAR=U3900.A5:5MM 5% 1/20W MF 201	SPI_AOP_SENSOR_MOSI	43
SPI_AOP_SENSOR_CLK_R	R4862	20	PLACE_NEAR=U3900.E5:5MM 5% 1/20W MF 201	SPI_AOP_SENSOR_CLK	43
SPI_AOP_SENSOR_MISO_R	R4869	20	PLACE_NEAR=U4870.3:5MM 5% 1/20W MF 201	SPI_AOP_SENSOR_MISO	35 43 84

Remote Feedback Sense (Buck 0, 2 & 5)

PPVDDCPU_AWAKE	XW4820	PLACE_NEAR=U3900.AA12:5MM	PVDDCPUAWAKE_FB_R	R4820 0201 5%	NOSTUFF 0 MF 1/20W PLACE_NEAR=R7806.1:1MM PVDDCPUAWAKE_FB
PP0V82_SLPDDR	XW4821	PLACE_NEAR=U3900.M25:5MM	P0V8SLPDDR_FB_R	R4821 0201 5%	0 MF 1/20W PLACE_NEAR=R7812.1:1MM P0V8SLPDDR_FB
PP0V9_SLPDDR	XW4822	PLACE_NEAR=U3900.AE22:5MM	P0V9SLPDDR_FB_R	R4822 0201 5%	0 MF 1/20W PLACE_NEAR=R7816.1:1MM P0V9SLPDDR_FB

Droop Circuit

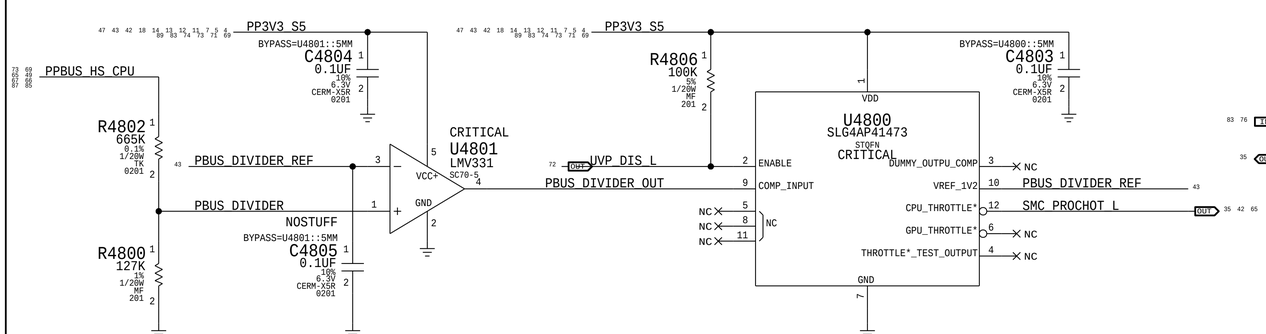

Triaxial acceleration sensor

NOSTUFF U4870 etc. per <rdar://46140415>

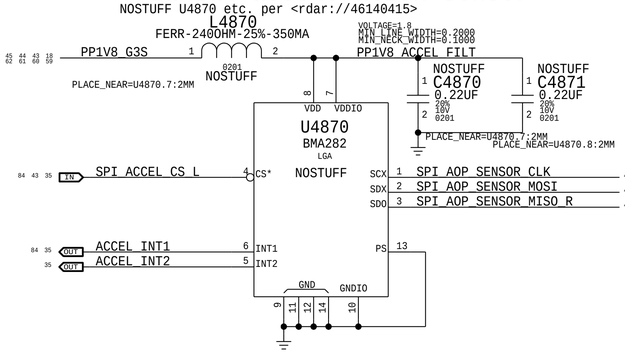

Project Specific Pull-Ups

PP1V8_SLPS2R

R4895	100K	5% 1/20W MF 201	SSD_PMU_RESET_L	34 81 83

PP1V8_AWAKE

R4883	47K	5% 1/20W MF 201	SSD0_CLKREQ0_L	37 77
R4884	47K	5% 1/20W MF 201	SSD0_CLKREQ1_L	37 78
R4887	47K	5% 1/20W MF 201	SSD0_CLKREQ2_L	37 79
R4888	47K	5% 1/20W MF 201	SSD0_CLKREQ3_L	37 80

PP1V8_G3S

R4871	100K	5% 1/20W MF 201	SPI_ACCEL_CS_L	35 43 84
R4872	100K	5% 1/20W MF 201	SPI_AOP_SENSOR_CLK	43
R4873	100K	5% 1/20W MF 201	SPI_AOP_SENSOR_MOSI	43
R4874	100K	5% 1/20W MF 201	SPI_AOP_SENSOR_MISO	35 43 84
R4875	100K	5% 1/20W MF 201	UART_WLAN_D2R	32 36
R4876	100K	5% 1/20W MF 201	UART_WLAN_D2R_CTS_L	32 36
R4885	100K	5% 1/20W MF 201	SSD0_PCIE_RESET_L	37 77 78 79 80
R4886	47K	5% 1/20W MF 201	SSD0_CLK24M	43 77 79
R4870	47K	5% 1/20W MF 201	PLACE_NEAR=R4857.1:1MM I2S_SPKRAMP_R_D2R	36

SoC Test Points

TP_SOC_AMUXOUT	PP4801	SM-SP
TP_SOC_TST_CLKOUT	PP4802	SM-SP

Lid Detect Sensors

Clamshell Closed/Open = Low/High
SMC and U6650 isolated per <rdar://45820207>

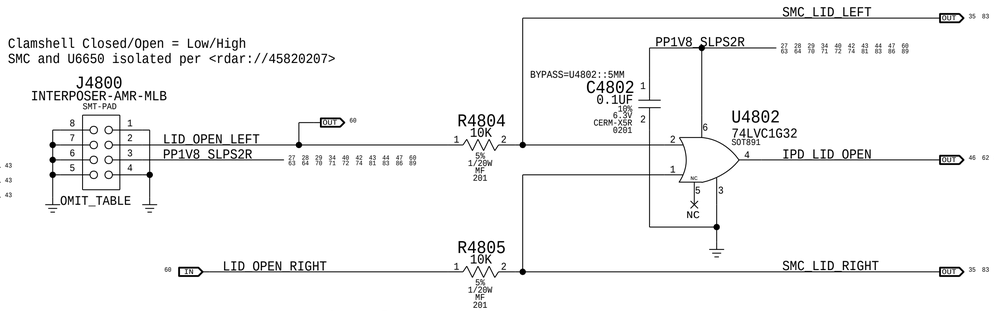

Unused SOC Signals

NC_PLCAM_TX_THROTTLE	NO_TEST=1
NC_GNSS_HOST_TIME	NO_TEST=1
NC_GNSS_DEV_WAKE	NO_TEST=1
NC_SOC_WLAN_DEV_WAKE	NO_TEST=1
NC_SOC_USB_ID	NO_TEST=1
NC_ALTIMETER_INT	NO_TEST=1
NC_SPI_ALTIMETER_CS_L	NO_TEST=1
NC_I2C_AOP_SCL	NO_TEST=1
NC_I2C_AOP_SDA	NO_TEST=1
NC_UART_BT_D2R	NO_TEST=1
NC_UART_BT_R2D	NO_TEST=1
NC_UART_BT_D2R_CTS_L	NO_TEST=1
NC_UART_BT_R2D_RTS_L	NO_TEST=1
NC_UART_GNSS_D2R_CTS_L	NO_TEST=1
NC_UART_GNSS_R2D_RTS_L	NO_TEST=1
NC_PLCAM_PROX_INT_L	NO_TEST=1
NC_PLCAM_ROMEO_B2B_DETECT	NO_TEST=1
NC_SMC_GFX_SELF_THROTTLE	NO_TEST=1
NC_SMC_TOPBLK_SWP_L	NO_TEST=1
NC_PCIEDN_WAKE_L	NO_TEST=1
NC_ENET_LOW_PWR	NO_TEST=1
NC_SDCONN_STATE_CHANGE_L	NO_TEST=1
NC_ENET_MEDIA_SENSE	NO_TEST=1
NC_SOC_WLAN_JTAG_TMS	NO_TEST=1
NC_MESA_MENUKEY_L	NO_TEST=1
NC_SOC_WLAN_JTAG_TCK	NO_TEST=1
NC_PCC_EVENT	NO_TEST=1
NC_TPAD_VIBE_L	NO_TEST=1
NC_SPI_DESCRIPTOR_OVERRIDE_L	NO_TEST=1
NC_DISP_GCON_INT_L	NO_TEST=1
NC_PCH_GCON_INT_L	NO_TEST=1
NC_SMC_FAN_1_PWM	NO_TEST=1
NC_SMC_FAN_1_TACH	NO_TEST=1
NC_SMC_LED_ONEWIRE	NO_TEST=1
NC_SSD1_SWCLK_UART_R2D	NO_TEST=1
NC_SSD1_SWDIO_UART_D2R	NO_TEST=1
NC_I2C_SOC_5_SDA	NO_TEST=1
NC_I2C_SOC_5_SCL	NO_TEST=1
NC_DFR_TOUCH_RSVD	NO_TEST=1
NC_PCHROM_SW_EN	NO_TEST=1
NC_I2S_CODEC_MCLK	NO_TEST=1
NC_I2S_HAWKING_D2R	NO_TEST=1
NC_I2S_CODEC1_R2D_R	NO_TEST=1
NC_I2S_HAWKING_BCLK_R	NO_TEST=1
NC_I2S_HAWKING_LRCLK	NO_TEST=1
NC_I2S_CODEC1_MCLK	NO_TEST=1
NC_I2C_PLCAM_SDA	NO_TEST=1
NC_I2C_PLCAM_SCL	NO_TEST=1
NC_FTCAM_CLK12M_R	NO_TEST=1
NC_FTCAM_RESET_L	NO_TEST=1
NC_PLCAM_RX_CLK12M_R	NO_TEST=1
NC_PLCAM_RX_RESET_L	NO_TEST=1
NC_PLCAM_TX_CLK12M_R	NO_TEST=1
NC_PLCAM_TX_RESET_L	NO_TEST=1
NC_PLCAM_TX_INT	NO_TEST=1
NC_PCIE_WLAN_R2D_C_P	NO_TEST=1
NC_PCIE_WLAN_R2D_C_N	NO_TEST=1
NC_PCIE_WLAN_D2R_P	NO_TEST=1
NC_PCIE_WLAN_D2R_N	NO_TEST=1
NC_PCIE_ENET_R2D_C_P	NO_TEST=1
NC_PCIE_ENET_R2D_C_N	NO_TEST=1
NC_PCIE_ENET_D2R_P	NO_TEST=1
NC_PCIE_ENET_D2R_N	NO_TEST=1
NC_PCIE_DN2_R2D_C_P	NO_TEST=1
NC_PCIE_DN2_R2D_C_N	NO_TEST=1
NC_PCIE_DN2_D2R_P	NO_TEST=1
NC_PCIE_DN2_D2R_N	NO_TEST=1
NC_PCIE_DN3_R2D_C_P	NO_TEST=1
NC_PCIE_DN3_R2D_C_N	NO_TEST=1
NC_PCIE_DN3_D2R_P	NO_TEST=1
NC_PCIE_DN3_D2R_N	NO_TEST=1
NC_PCIE_CLK100M_WLAN_P	NO_TEST=1
NC_PCIE_CLK100M_WLAN_N	NO_TEST=1
NC_WLAN_CLKREQ_L	NO_TEST=1
NC_WLAN_PERST_L	NO_TEST=1
NC_PCIE_CLK100M_ENET_P	NO_TEST=1
NC_PCIE_CLK100M_ENET_N	NO_TEST=1
NC_ENET_RESET_L	NO_TEST=1
NC_PCIE_CLK100M_DN2_P	NO_TEST=1
NC_PCIE_CLK100M_DN2_N	NO_TEST=1
NC_PCIEDN2_CLKREQ_L	NO_TEST=1
NC_PCIEDN2_RESET_L	NO_TEST=1
NC_PCIE_CLK100M_DN3_P	NO_TEST=1
NC_PCIE_CLK100M_DN3_N	NO_TEST=1
NC_PCIEDN3_CLKREQ_L	NO_TEST=1
NC_PCIEDN3_RESET_L	NO_TEST=1
NC_PCIE_SSD1_R2D_C_P<0>	NO_TEST=1
NC_PCIE_SSD1_R2D_C_N<0>	NO_TEST=1
NC_PCIE_SSD1_D2R_P<0>	NO_TEST=1
NC_PCIE_SSD1_D2R_N<0>	NO_TEST=1
NC_PCIE_SSD1_R2D_C_P<1>	NO_TEST=1
NC_PCIE_SSD1_R2D_C_N<1>	NO_TEST=1
NC_PCIE_SSD1_D2R_P<1>	NO_TEST=1
NC_PCIE_SSD1_D2R_N<1>	NO_TEST=1
NC_PCIE_SSD1_R2D_C_P<2>	NO_TEST=1
NC_PCIE_SSD1_R2D_C_N<2>	NO_TEST=1
NC_PCIE_SSD1_D2R_P<2>	NO_TEST=1
NC_PCIE_SSD1_D2R_N<2>	NO_TEST=1
NC_PCIE_SSD1_R2D_C_P<3>	NO_TEST=1
NC_PCIE_SSD1_R2D_C_N<3>	NO_TEST=1
NC_PCIE_SSD1_D2R_P<3>	NO_TEST=1
NC_PCIE_SSD1_D2R_N<3>	NO_TEST=1
NC_PCIE_CLK100M_SSD1_01_P	NO_TEST=1
NC_PCIE_CLK100M_SSD1_01_N	NO_TEST=1
NC_SSD1_CLKREQ0_L	NO_TEST=1
NC_SSD1_CLKREQ1_L	NO_TEST=1
NC_PCIE_CLK100M_SSD1_23_P	NO_TEST=1
NC_PCIE_CLK100M_SSD1_23_N	NO_TEST=1
NC_SSD1_CLKREQ2_L	NO_TEST=1
NC_SSD1_CLKREQ3_L	NO_TEST=1
NC_SSD1_PCIE_RESET_L	NO_TEST=1
NC_SSD1_CLK24M_R	NO_TEST=1
NC_WLAN_CONTEXT_A	NO_TEST=1
NC_WLAN_CONTEXT_B	NO_TEST=1

HPD KSF Comp Circuit

R4830 needs to be characterized and adjusted if necessary

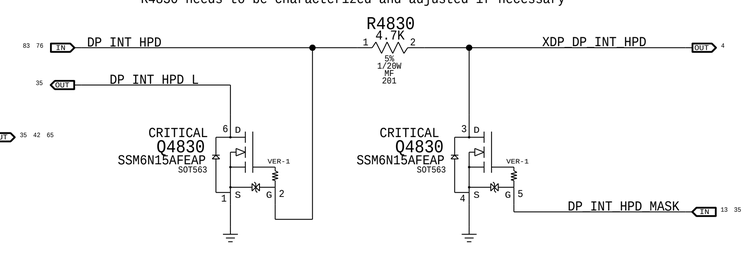

BOM_COST_GROUP=SOC

PAGE TITLE
SOC PROJECT SUPPORT

Apple Inc.

NOTICE OF PROPRIETARY PROPERTY:
THE INFORMATION CONTAINED HEREIN IS THE PROPRIETARY PROPERTY OF APPLE INC.
THE POSESSOR AGREES TO THE FOLLOWING:
I TO MAINTAIN THIS DOCUMENT IN CONFIDENCE
II NOT TO REPRODUCE OR COPY IT
III NOT TO REVEAL OR PUBLISH IT IN WHOLE OR PART
IV ALL RIGHTS RESERVED

DRAWING NUMBER	051-05309
SIZE	D
REVISION	6.0.0
BRANCH	pvt
PAGE	48 OF 500
SHEET	43 OF 98

ISOLATE FROM OTHER COMPONENTS/NETS AS MUCH AS POSSIBLE

ESD Filters

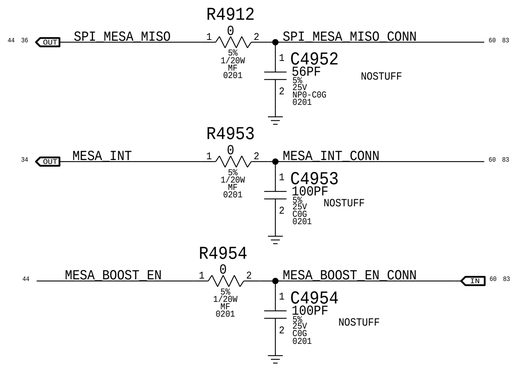

T151 FLEX CONNECTOR

ISOLATE FROM OTHER COMPONENTS/NETS AS MUCH AS POSSIBLE

ESD Filters

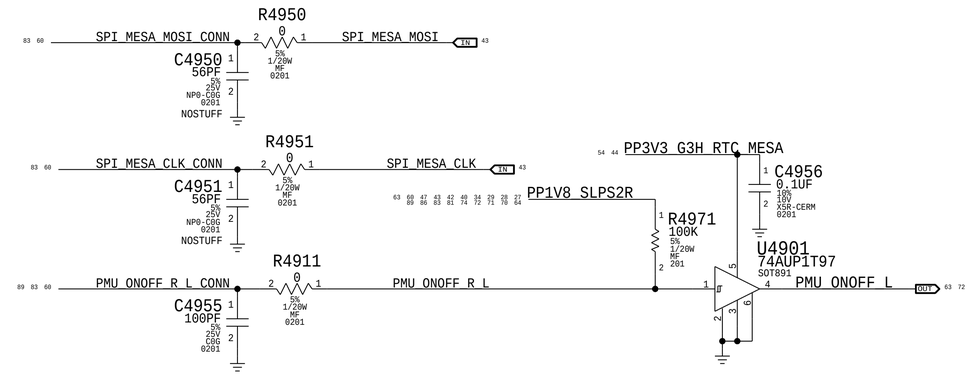

Mesa Power Sequencing Requirements

Power On: 1V8 -> 3V3 -> 16V0

Output Voltage	16.0V +/- 2%
Iout (max avg)	6mA
OCP (min)	13 mA
Active Discharge	15 mA sink
Max Output Cap	0.5uF @ 16V

MOJAVE 16V BOOST

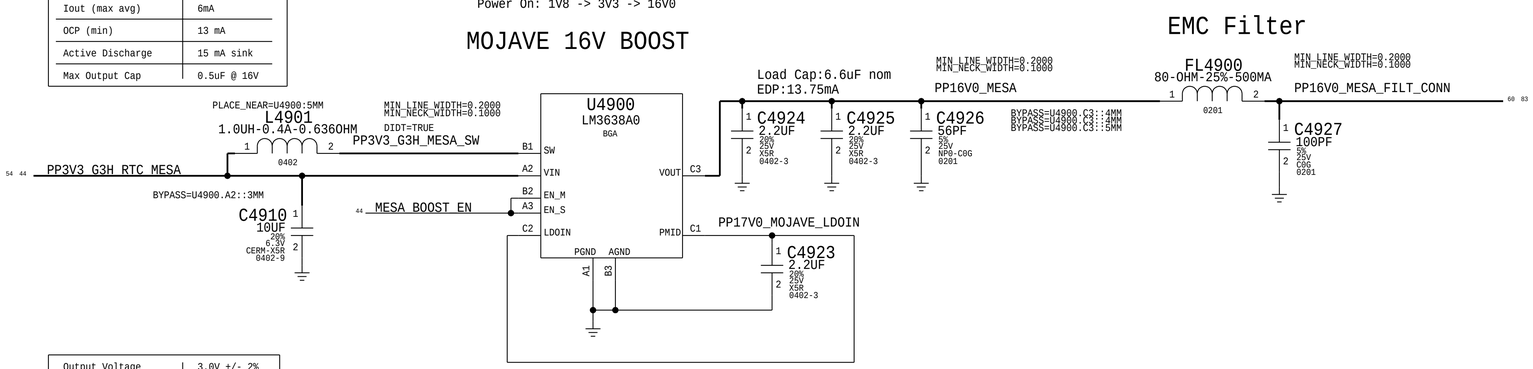

Output Voltage	3.0V +/- 2%
Iout (max avg)	250mA
Dropout Voltage	155mV
OCP (min)	250 mA
Active Discharge	280 Ohm Typ

3.0V MESA

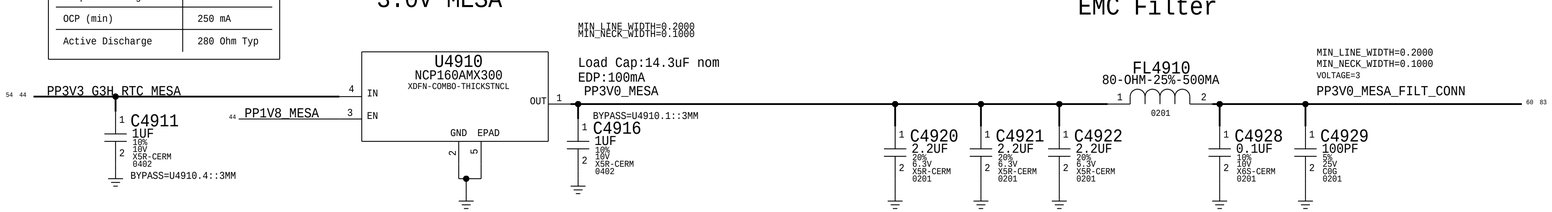

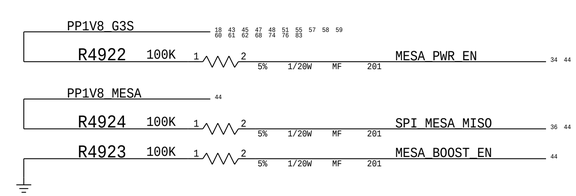

Output Voltage	1.85V +/- 2%
Iout (max avg)	250mA
Dropout Voltage	50mV Typ @ 100mA
OCP (min)	250 mA
Active Discharge	230 Ohm Typ
Max Output Cap	10uF

1.85V MESA

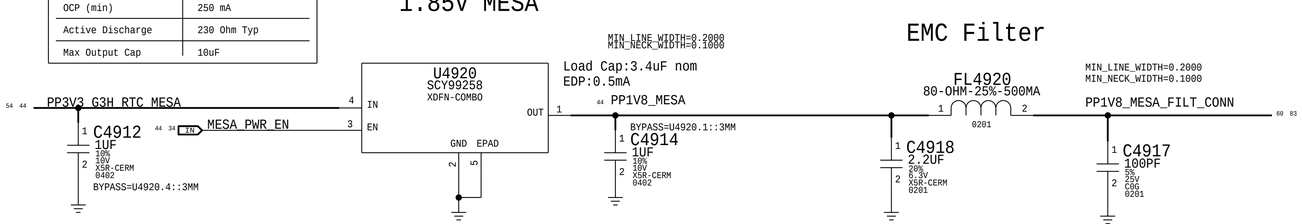

BOM_COST_GROUP=MESA

PAGE TITLE: T151

Apple Inc.

NOTICE OF PROPRIETARY PROPERTY:
THE INFORMATION CONTAINED HEREIN IS THE PROPRIETARY PROPERTY OF APPLE INC.
THE POSESSOR AGREES TO THE FOLLOWING:
I TO MAINTAIN THIS DOCUMENT IN CONFIDENCE
II NOT TO REPRODUCE OR COPY IT
III NOT TO REVEAL OR PUBLISH IT IN WHOLE OR PART
IV ALL RIGHTS RESERVED

DRAWING NUMBER: 051-05309 SIZE: D
REVISION: 6.0.0
BRANCH: pvt
PAGE: 49 OF 500
SHEET: 44 OF 98

VENUS

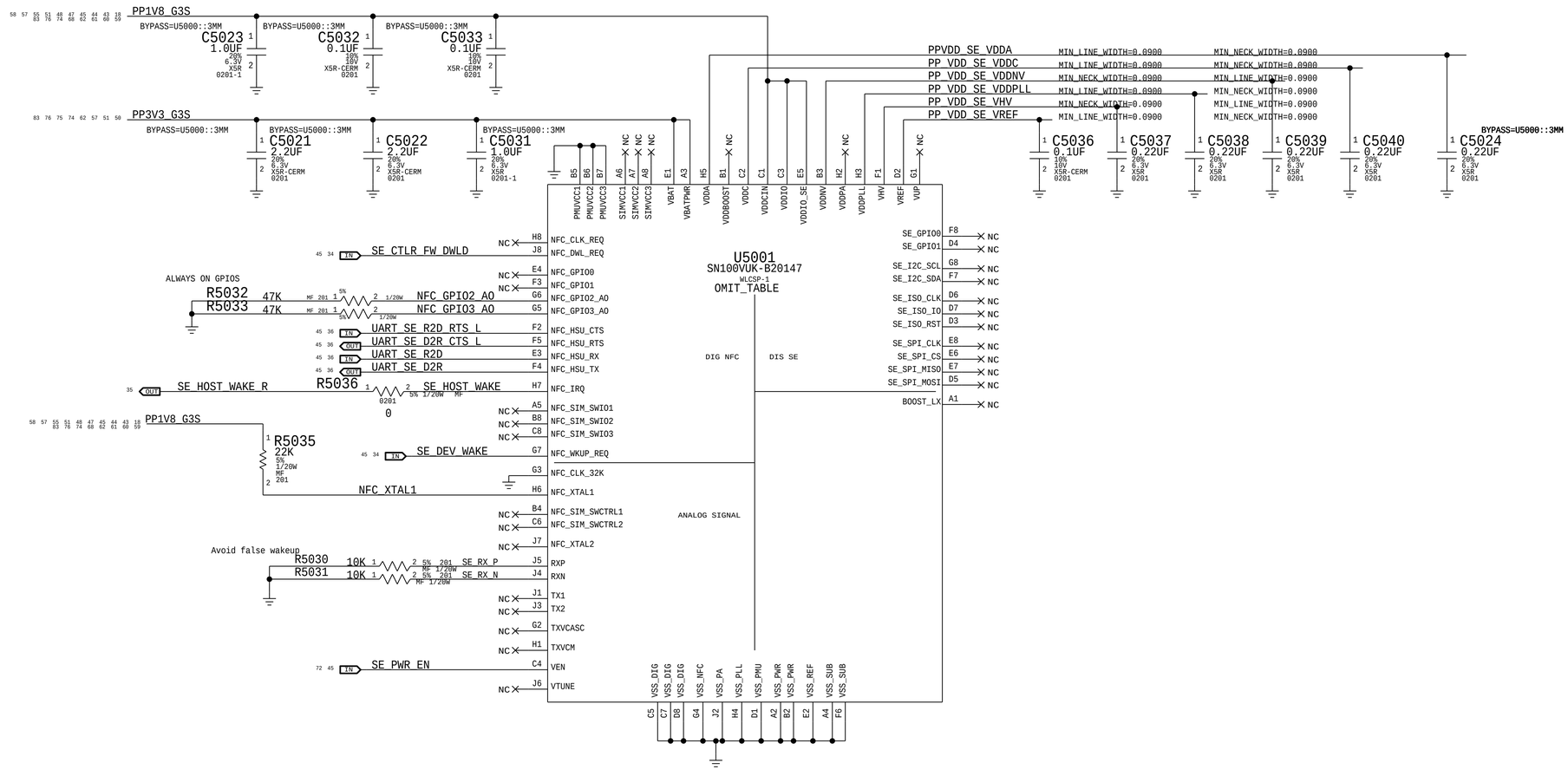

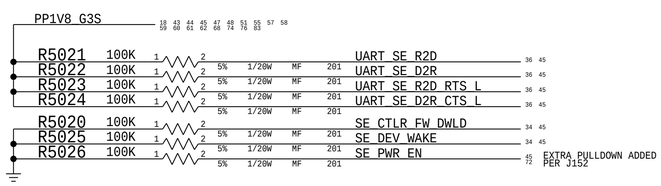

BOM_COST_GROUP=SOC

PAGE TITLE: SECURE ELEMENT

Apple Inc.

DRAWING NUMBER: 051-05309 | SIZE: D

REVISION: 6.0.0

BRANCH: pvt

PAGE: 50 OF 500

SHEET: 45 OF 98

NOTICE OF PROPRIETARY PROPERTY:
THE INFORMATION CONTAINED HEREIN IS THE PROPRIETARY PROPERTY OF APPLE INC.
THE POSESSOR AGREES TO THE FOLLOWING:
I TO MAINTAIN THIS DOCUMENT IN CONFIDENCE
II NOT TO REPRODUCE OR COPY IT
III NOT TO REVEAL OR PUBLISH IT IN WHOLE OR PART
IV ALL RIGHTS RESERVED

T139 Support

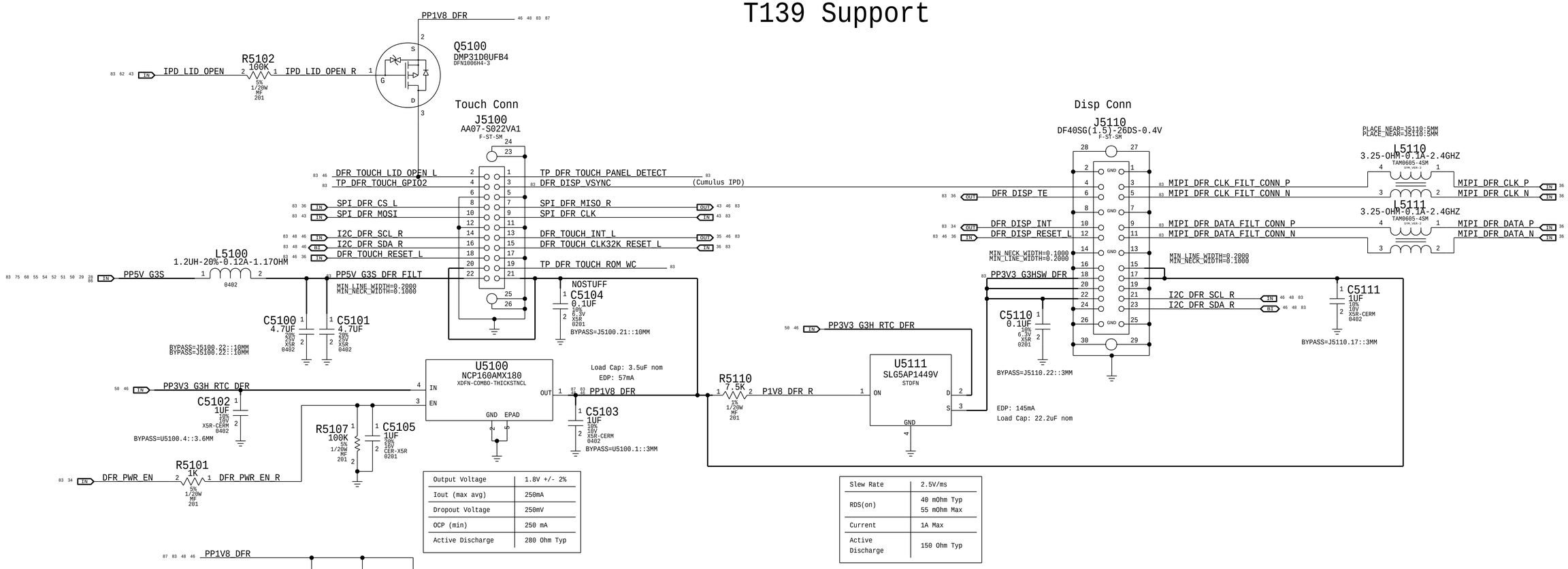

Output Voltage	1.8V +/- 2%
Iout (max avg)	250mA
Dropout Voltage	250mV
OCP (min)	250 mA
Active Discharge	280 Ohm Typ

Slew Rate	2.5V/ms
RDS(on)	40 mOhm Typ 55 mOhm Max
Current	1A Max
Active Discharge	150 Ohm Typ

BOM_COST_GROUP=DFR

PAGE TITLE
T139 SUPPORT

Apple Inc.

NOTICE OF PROPRIETARY PROPERTY:
THE INFORMATION CONTAINED HEREIN IS THE PROPRIETARY PROPERTY OF APPLE INC.
THE POSESSOR AGREES TO THE FOLLOWING:
I TO MAINTAIN THIS DOCUMENT IN CONFIDENCE
II NOT TO REPRODUCE OR COPY IT
III NOT TO REVEAL OR PUBLISH IT IN WHOLE OR PART
IV ALL RIGHTS RESERVED

DRAWING NUMBER 051-05309
SIZE D
REVISION 6.0.0
BRANCH pvt
PAGE 51 OF 500
SHEET 46 OF 98

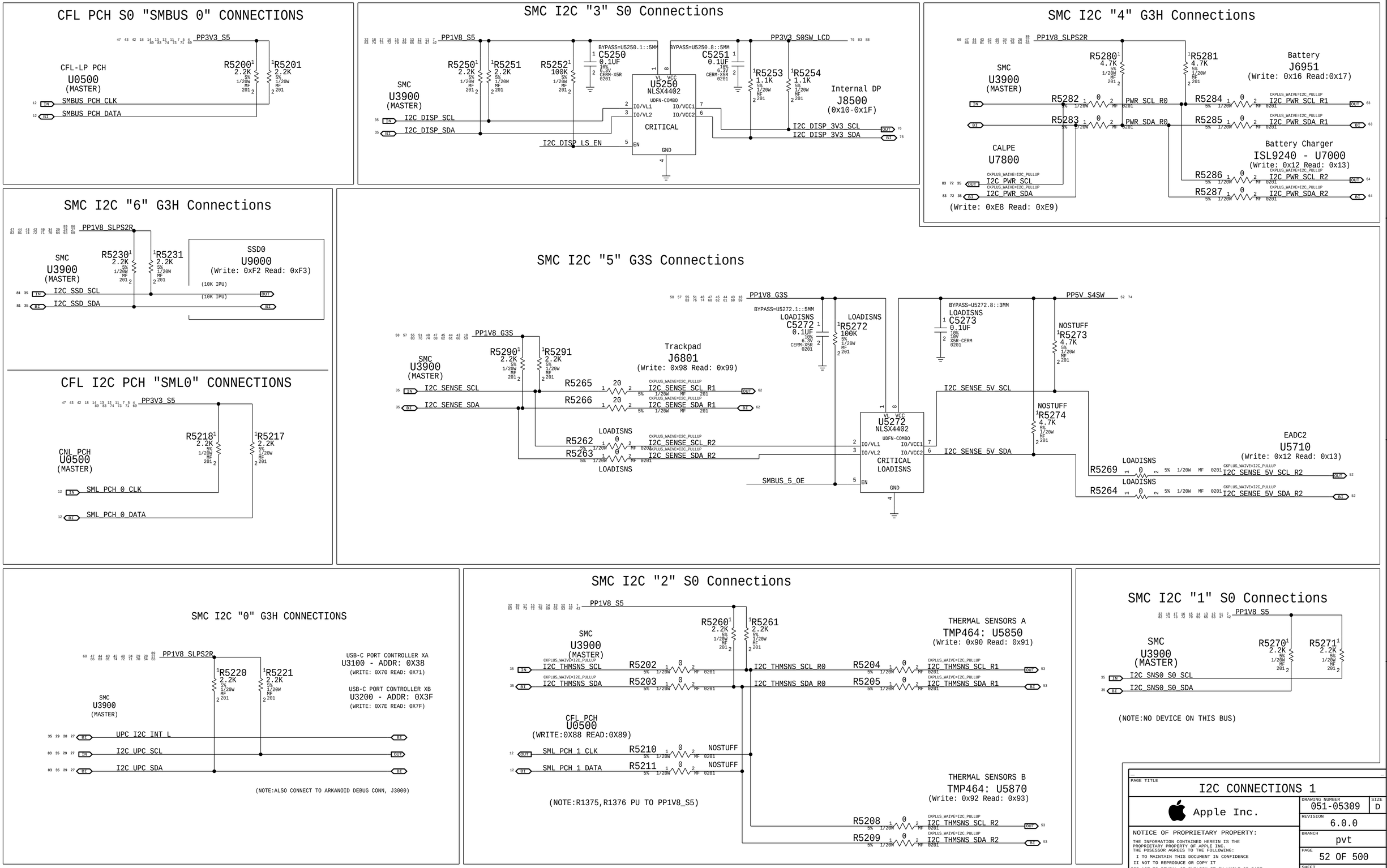
CFL PCH S0 "SMBUS 0" CONNECTIONS
PP3V3_S5
CFL-LP PCH
U0500
(MASTER)
R5200 2.2K
R5201 2.2K
SMBUS_PCH_CLK
SMBUS_PCH_DATA
SMC I2C "3" S0 Connections
PP1V8_S5
PP3V3_S0SW_LCD
SMC
U3900
(MASTER)
R5250 2.2K
R5251 2.2K
R5252 100K
C5250 0.1UF
C5251 0.1UF
U5250
NLSX4402
CRITICAL
R5253 1.1K
R5254 1.1K
Internal DP
J8500
(0x10-0x1F)
I2C_DISP_SCL
I2C_DISP_SDA
I2C_DISP_LS_EN
I2C_DISP_3V3_SCL
I2C_DISP_3V3_SDA
SMC I2C "4" G3H Connections
PP1V8_SLPS2R
SMC
U3900
(MASTER)
R5280 4.7K
R5281 4.7K
Battery
J6951
(Write: 0x16 Read:0x17)
R5282
R5283
PWR_SCL_R0
PWR_SDA_R0
R5284
R5285
I2C_PWR_SCL_R1
I2C_PWR_SDA_R1
CALPE
U7800
I2C_PWR_SCL
I2C_PWR_SDA
(Write: 0xE8 Read: 0xE9)
Battery Charger
ISL9240 - U7000
(Write: 0x12 Read: 0x13)
R5286
R5287
I2C_PWR_SCL_R2
I2C_PWR_SDA_R2
SMC I2C "6" G3H Connections
PP1V8_SLPS2R
SMC
U3900
(MASTER)
R5230 2.2K
R5231 2.2K
SSD0
U9000
(Write: 0xF2 Read: 0xF3)
(10K IPU)
I2C_SSD_SCL
I2C_SSD_SDA
SMC I2C "5" G3S Connections
PP1V8_G3S
PP5V_S4SW
SMC
U3900
(MASTER)
R5290 2.2K
R5291 2.2K
Trackpad
J6801
(Write: 0x98 Read: 0x99)
I2C_SENSE_SCL
I2C_SENSE_SDA
R5265
R5266
I2C_SENSE_SCL_R1
I2C_SENSE_SDA_R1
R5262
R5263
I2C_SENSE_SCL_R2
I2C_SENSE_SDA_R2
LOADISNS
C5272 0.1UF
R5272 100K
C5273 0.1UF
NOSTUFF
R5273 4.7K
R5274 4.7K
U5272
NLSX4402
CRITICAL
LOADISNS
SMBUS_5_OE
I2C_SENSE_5V_SCL
I2C_SENSE_5V_SDA
EADC2
U5710
(Write: 0x12 Read: 0x13)
R5269
R5264
I2C_SENSE_5V_SCL_R2
I2C_SENSE_5V_SDA_R2
CFL I2C PCH "SML0" CONNECTIONS
PP3V3_S5
CNL PCH
U0500
(MASTER)
R5218 2.2K
R5217 2.2K
SML_PCH_0_CLK
SML_PCH_0_DATA
SMC I2C "0" G3H CONNECTIONS
PP1V8_SLPS2R
SMC
U3900
(MASTER)
R5220 2.2K
R5221 2.2K
USB-C PORT CONTROLLER XA
U3100 - ADDR: 0X38
(WRITE: 0X70 READ: 0X71)
USB-C PORT CONTROLLER XB
U3200 - ADDR: 0X3F
(WRITE: 0X7E READ: 0X7F)
UPC_I2C_INT_L
I2C_UPC_SCL
I2C_UPC_SDA
(NOTE:ALSO CONNECT TO ARKANOID DEBUG CONN, J3000)
SMC I2C "2" S0 Connections
PP1V8_S5
SMC
U3900
(MASTER)
R5260 2.2K
R5261 2.2K
I2C_THMSNS_SCL
I2C_THMSNS_SDA
R5202
R5203
I2C_THMSNS_SCL_R0
I2C_THMSNS_SDA_R0
THERMAL SENSORS A
TMP464: U5850
(Write: 0x90 Read: 0x91)
R5204
R5205
I2C_THMSNS_SCL_R1
I2C_THMSNS_SDA_R1
CFL PCH
U0500
(WRITE:0X88 READ:0X89)
SML_PCH_1_CLK
SML_PCH_1_DATA
R5210
R5211
NOSTUFF
(NOTE:R1375,R1376 PU TO PP1V8_S5)
THERMAL SENSORS B
TMP464: U5870
(Write: 0x92 Read: 0x93)
R5208
R5209
I2C_THMSNS_SCL_R2
I2C_THMSNS_SDA_R2
SMC I2C "1" S0 Connections
PP1V8_S5
SMC
U3900
(MASTER)
R5270 2.2K
R5271 2.2K
I2C_SNS0_S0_SCL
I2C_SNS0_S0_SDA
(NOTE:NO DEVICE ON THIS BUS)
BOM_COST_GROUP=SMC
PAGE TITLE
I2C CONNECTIONS 1
Apple Inc.
DRAWING NUMBER
051-05309
SIZE
D
REVISION
6.0.0
BRANCH
pvt
PAGE
52 OF 500
SHEET
47 OF 98
NOTICE OF PROPRIETARY PROPERTY:
THE INFORMATION CONTAINED HEREIN IS THE PROPRIETARY PROPERTY OF APPLE INC.
THE POSESSOR AGREES TO THE FOLLOWING:
I TO MAINTAIN THIS DOCUMENT IN CONFIDENCE
II NOT TO REPRODUCE OR COPY IT
III NOT TO REVEAL OR PUBLISH IT IN WHOLE OR PART
IV ALL RIGHTS RESERVED

AP I2C "0" G3S Connections

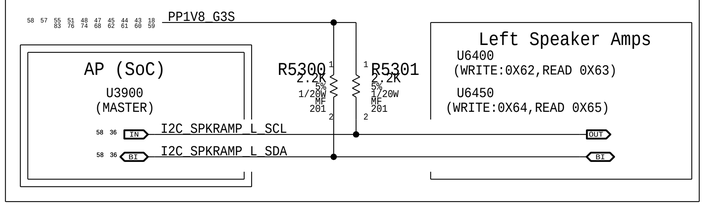

AP I2C "1" G3S Connections

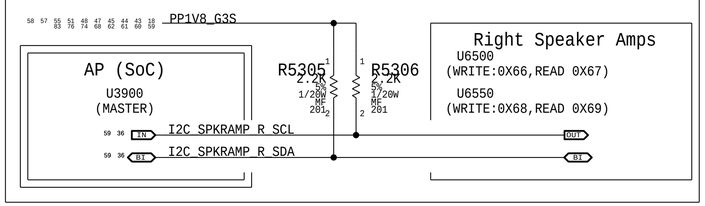

AP I2C "2" Codec Connections

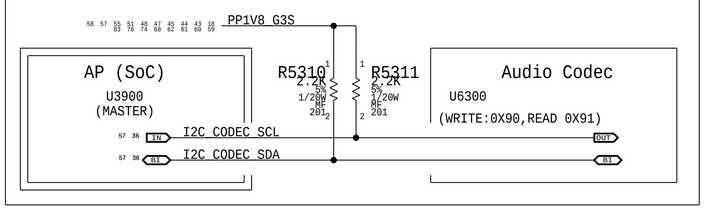

AP I2C "3" G3S Connections

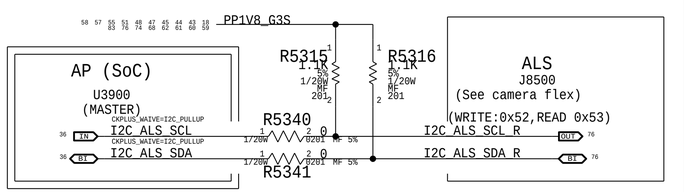

AP I2C "4" DFR Connections

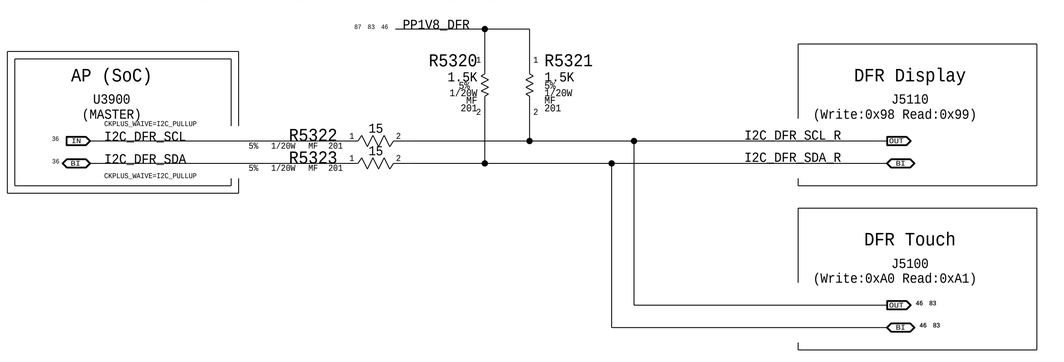

ISP I2C "0" G3S Connections

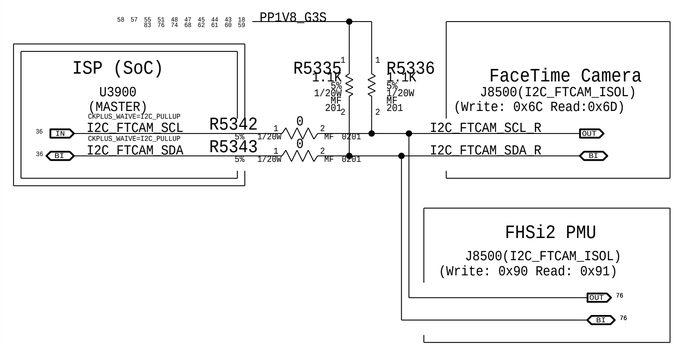

Device	SMC IF	ADDR. (8b)
ACE XA	I2C0	0X70/1
ACE XB	I2C0	0X7E/F
NC.	I2C1	
TEMP. SENSOR A	I2C2	0X90/1
TEMP. SENSOR B	I2C2	0X92/3
TCON	I2C3	0X10-1F
Charger	I2C4	0X12/3
Battery	I2C4	0X16/7
Calpe	I2C4	0XE8/9
Trackpad	I2C5	0X98/9
EADC1	I2C5	0X10/1
EADC2	I2C5	0X12/3
SSD	I2C6	0XF2/3
SOC IF (AP)		
Left Spkr Amp.(U6400)	I2C0	0X62/3
Left Spkr Amp.(U6450)	I2C0	0X64/5
Right Spkr Amp.(U6500)	I2C1	0X66/7
Right Spkr Amp.(U6550)	I2C1	0X68/9
Audio Codec	I2C2	0X90/1
ALS	I2C3	0X52/3
DFR Display	I2C4	0X98/9
DFR Touch	I2C4	0XA0/1
NC.	I2C5	
Spkr ID1	I2C6	
Spkr ID0	I2C6	
SIP IF (ISP)		
FT Camera	I2C0	0X6C/D
FHSi2	I2C0	0X90/1
NC.	I2C1	
AOP IF		
NC.	I2C0	

BOM_COST_GROUP=SMC

PAGE TITLE
I2C CONNECTIONS 2

Apple Inc.

DRAWING NUMBER 051-05309 SIZE D
REVISION 6.0.0
BRANCH pvt
PAGE 53 OF 500
SHEET 48 OF 98

NOTICE OF PROPRIETARY PROPERTY:
THE INFORMATION CONTAINED HEREIN IS THE PROPRIETARY PROPERTY OF APPLE INC.
THE POSESSOR AGREES TO THE FOLLOWING:
I TO MAINTAIN THIS DOCUMENT IN CONFIDENCE
II NOT TO REPRODUCE OR COPY IT
III NOT TO REVEAL OR PUBLISH IT IN WHOLE OR PART
IV ALL RIGHTS RESERVED

CPU High Side Current Sense (IC0R)

Gain: 100x, EDP: 8.868 A
Rsense: 0.002 (R5400) [Production]
Vsense: 17.7 mV, Range: 12.5 A
SMC ADC: 00

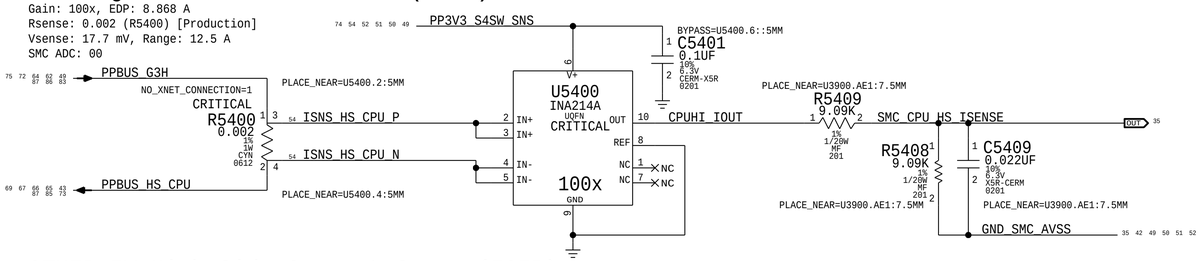

OTHER 5V High Side Current Sense (IO5R)

Gain: 100x, EDP: 5.227 A
Rsense: 0.005 (R5410) or SHORT
Vsense: 26.1 mV, Range: 6.0 A
MUX: A1

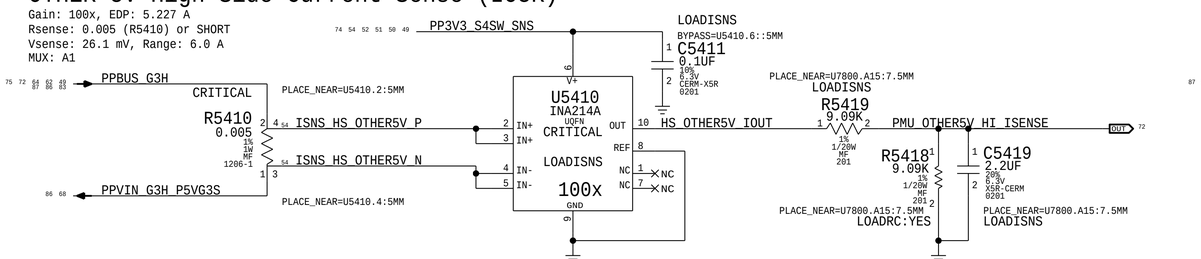

OTHER 3.3V High Side Current Sense (IO3R)

Gain: 100x, EDP: 6.736 A
Rsense: 0.003 (R5440) or SHORT
Vsense: 20.2 mV, Range: 10 A
MUX: A0

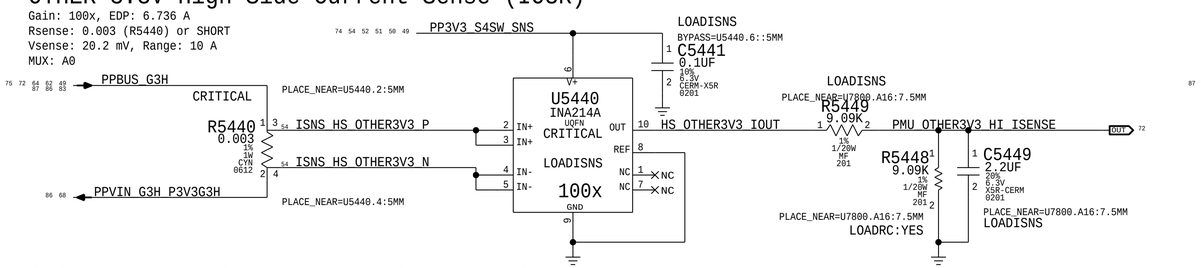

3.3V RTC High Side Current Sense (IR3R)

Gain: 100x, EDP: 2.413 A
Rsense: 0.01 (R5420) or SHORT
Vsense: 24.1 mV, Range: 3.3 A
EADC1: CH4

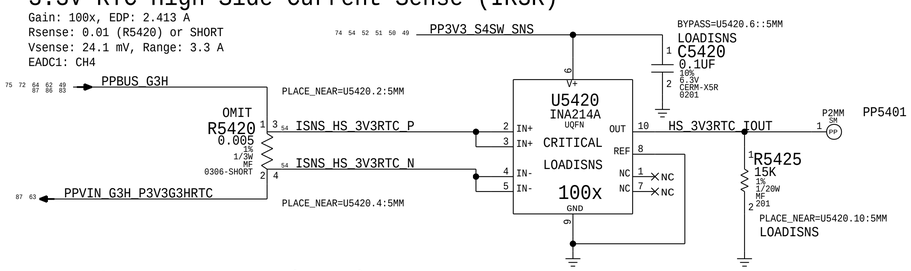

NAND Current Sense (IHNR)

Gain: 100x, EDP: 1.471 A
Rsense: 0.02 (R5460) [Production]
Vsense: 29.4 mV, Range: 1.5 A
MUX: A6

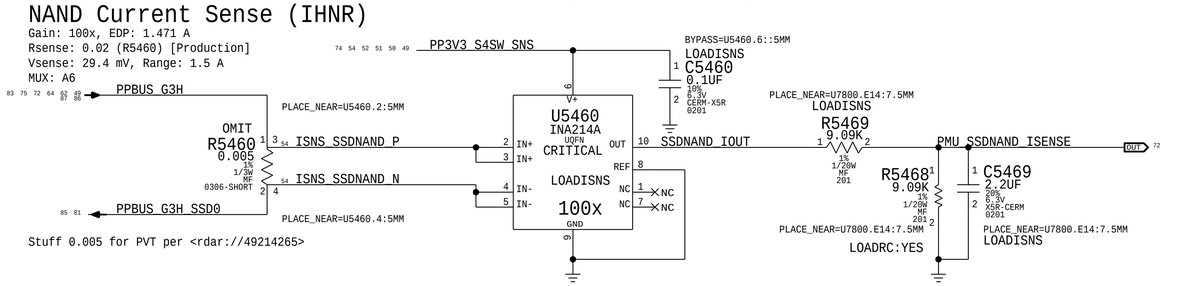

Stuff 0.005 for PVT per <rdar://49214265>

PART NUMBER	QTY	DESCRIPTION	REFERENCE DES	CRITICAL	BOM OPTION
117S0008	3	RES,MTL FLIM,100K,1/16W,0201,SMD,LF	R5418,R5448, R5468		LOADRC:NO

LCD Backlight Current Sense (IBLR)

Gain: 100x. EDP: 0.902 A
Rsense: 0.025 (R8400)
Vsense: 22.6 mV, Range: 1.32 A

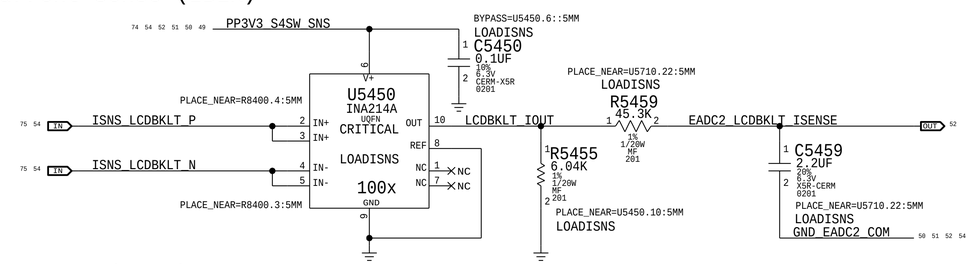

Left AMP Current Sense (IALR)

Gain: 200x, EDP: 2.6 A
Rsense: 0.005 (R54A0) or SHORT
Vsense: 13 mV, Range: 3.3 A

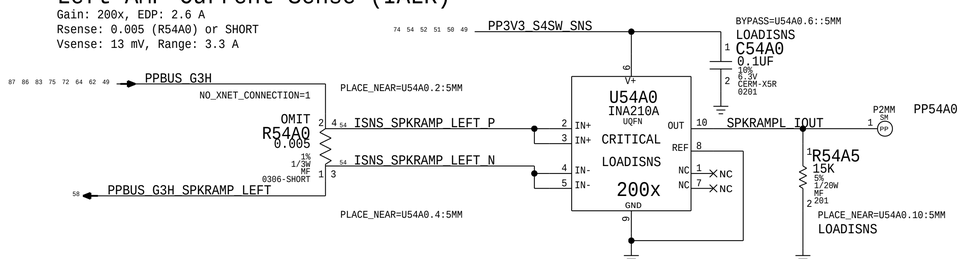

Right AMP Current Sense (IARR)

Gain: 200x, EDP: 2.6 A
Rsense: 0.005 (R54B0) or SHORT
Vsense: 13 mV, Range: 3.3 A

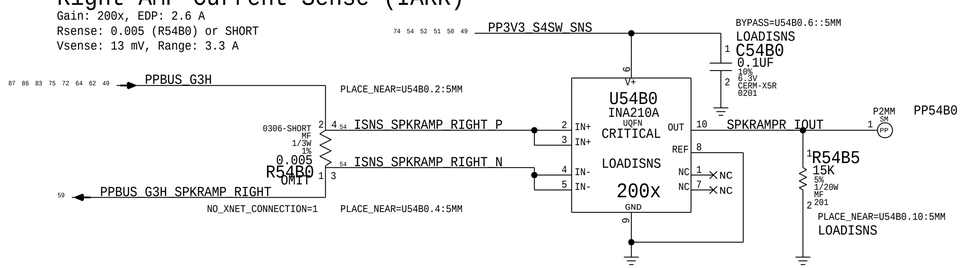

PBUS Voltage Sense & Enable (VP0R)

GAIN: 0.089X
VNOMINAL: 12.6 V, RANGE: 14.05 V
SMC ADC: 01

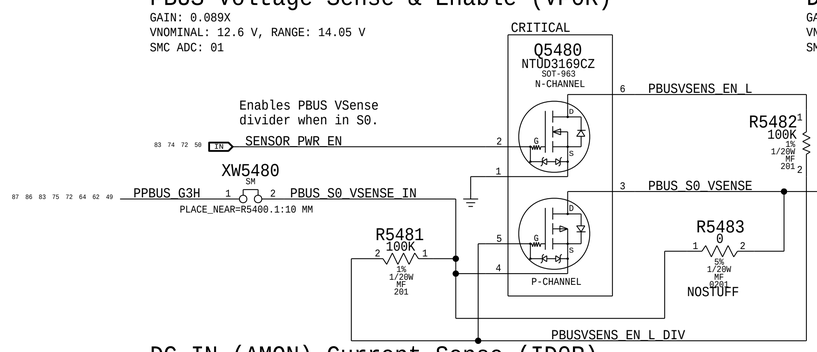

DC In Voltage Sense (VD0R)

GAIN: 0.058X
VNOMINAL: 16.5 V, RANGE: 21.45 V
SMC ADC: 04

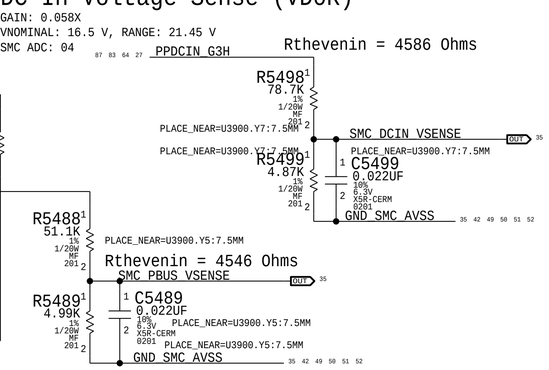

DC-IN (AMON) Current Sense (ID0R)

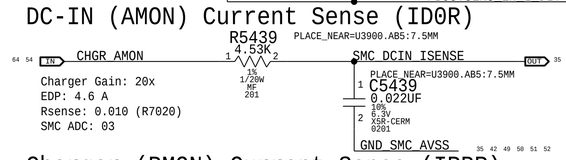

Charger Gain: 20x
EDP: 4.6 A
Rsense: 0.010 (R7020)
SMC ADC: 03

Charger (BMON) Current Sense (IPBR)

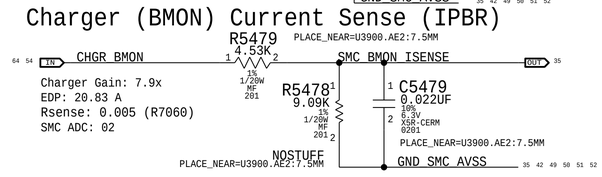

Charger Gain: 7.9x
EDP: 20.83 A
Rsense: 0.005 (R7060)
SMC ADC: 02

BOM_COST_GROUP=SENSORS

PAGE TITLE
POWER SENSORS HIGH SIDE

Apple Inc.

DRAWING NUMBER 051-05309
SIZE D
REVISION 6.0.0
BRANCH pvt
PAGE 54 OF 500
SHEET 49 OF 98

NOTICE OF PROPRIETARY PROPERTY:
THE INFORMATION CONTAINED HEREIN IS THE PROPRIETARY PROPERTY OF APPLE INC.
THE POSESSOR AGREES TO THE FOLLOWING:
I TO MAINTAIN THIS DOCUMENT IN CONFIDENCE
II NOT TO REPRODUCE OR COPY IT
III NOT TO REVEAL OR PUBLISH IT IN WHOLE OR PART
IV ALL RIGHTS RESERVED

CPU VCCIO Current Sense (IC1C)

Gain: 200x, EDP: 3.6 A
Rsense: 0.003 (R8102) or SHORT
Vsense: 10.8 mV, Range: 5 A
PMU AMUX: A3

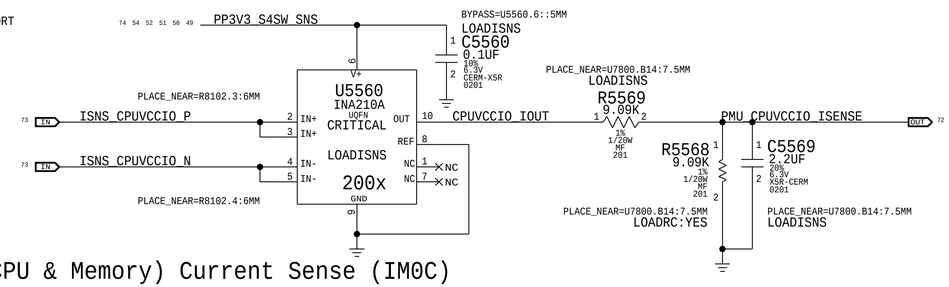

DDR 1.2V S3 (CPU & Memory) Current Sense (IM0C)

Gain: 200x, EDP: 6.9 A
Rsense: 0.002 (R8118) or SHORT
Vsense: 13.8 mV, Range: 7.5 A
PMU AMUX: A4

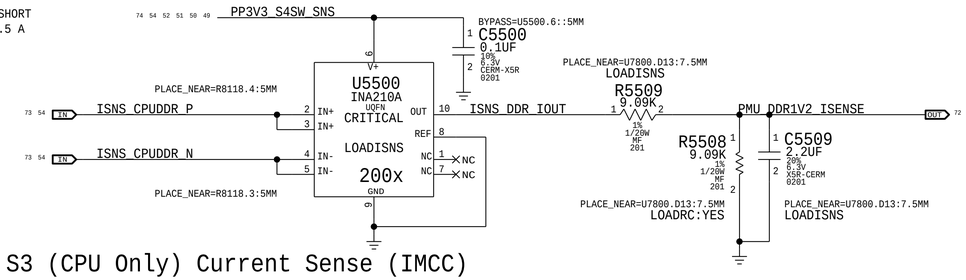

CPU DDR 1.2V S3 (CPU Only) Current Sense (IMCC)

Gain: 200x, EDP: 2.6 A
Rsense: 0.005 (R5510) or SHORT
Vsense: 13 mV, Range: 3 A
PMU AMUX: B2

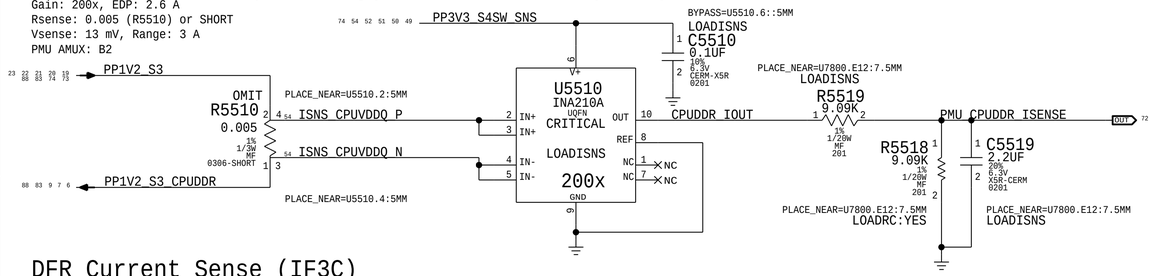

DFR Current Sense (IF3C)

Gain: 100x, EDP: 0.75 A
Rsense: 0.025 (R5520) or SHORT
Vsense: 18.8 mV, Range: 1.32 A

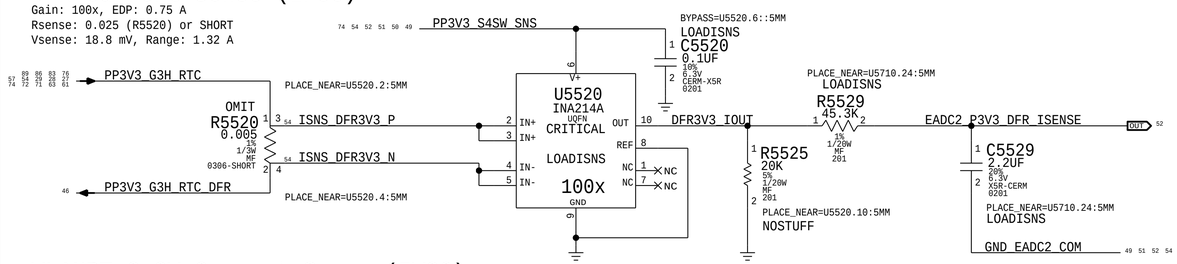

WLANBT 3.3V Current Sense (IW3C)

Gain: 163.3x, EDP: 1.698 A
Rsense: 0.003 (R5530) or Rsense SHORT
VSENSE: 5.09 MV, RANGE: 2.55 A
SMC ADC: 05

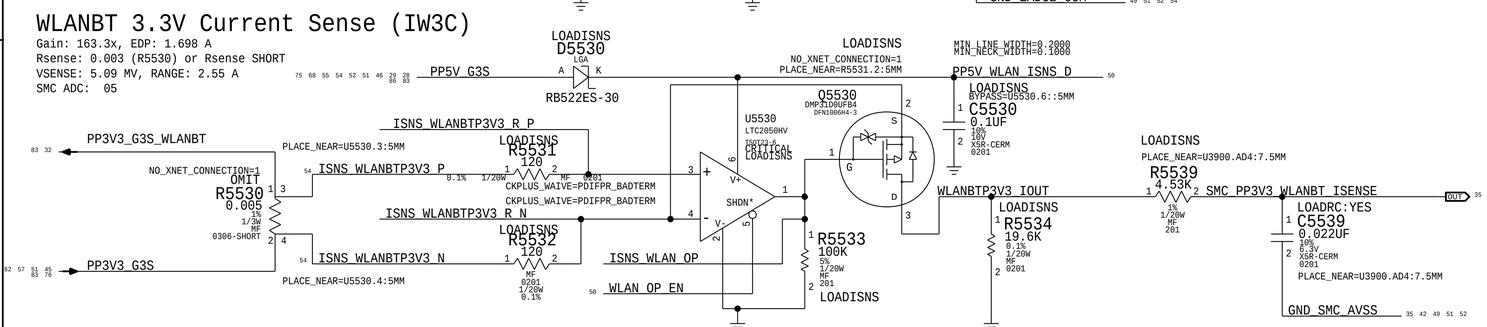

CPU Core Current Sense (ICAC)

Gain: 104.38x, EDP: 64 A
Rsense: 2x of 0.00075 (R7310, R7320), Rsum: 0.000375
Vsense: 24 MV, Range: 76.64 A
PMU AMUX: B7

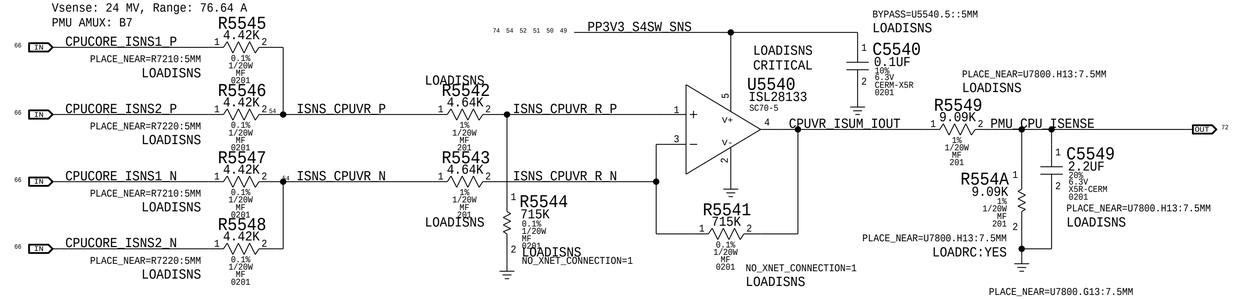

CPU Core Voltage Sense (VCAC)

PMU AMUX: B4

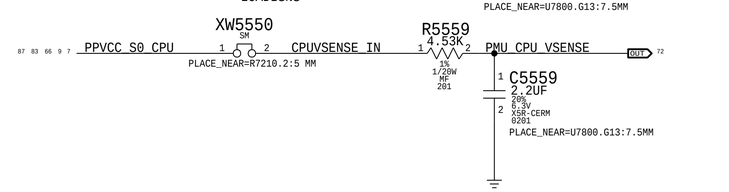

CPU GT+GTX Current Sense (ICGC)

Gain: 104.38x, EDP: 64 A
Rsense: 2x of 0.00075 (R7410, R7420), Rsum: 0.000375
Vsense: 24 mV, Range: 76.64 A
PMU AMUX: B6

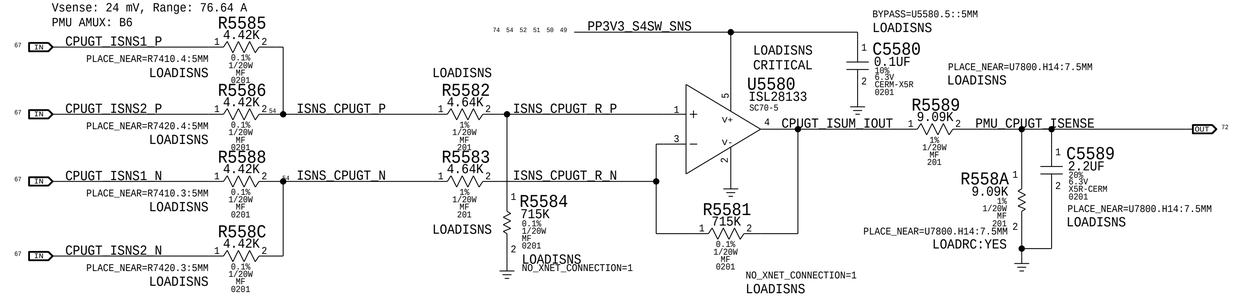

CPU GT Voltage Sense (VCGC)

PMU AMUX: B5

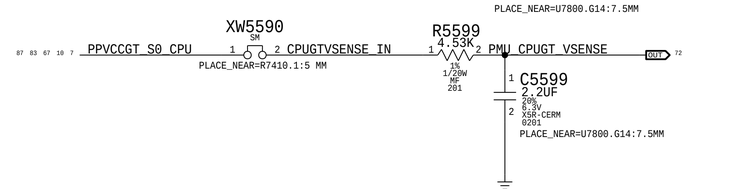

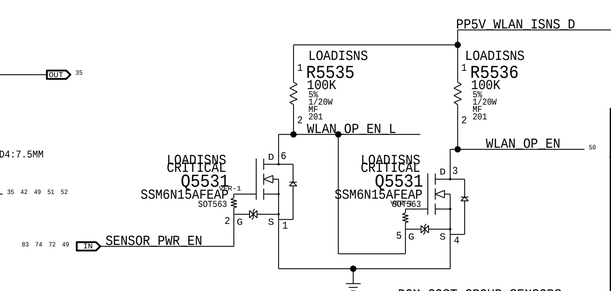

PART NUMBER	QTY	DESCRIPTION	REFERENCE DES	CRITICAL	BOM OPTION
117S0008	6	RES,MTL FLIM,100K,1/16W,0201,SMD,LF	R5508,R5518,R5568,R554A,R558A,C5539		LOADRC:NO

PAGE TITLE
POWER SENSORS LOAD SIDE

Apple Inc.

DRAWING NUMBER 051-05309
SIZE D
REVISION 6.0.0
BRANCH pvt
PAGE 55 OF 500
SHEET 50 OF 98

NOTICE OF PROPRIETARY PROPERTY:
THE INFORMATION CONTAINED HEREIN IS THE PROPRIETARY PROPERTY OF APPLE INC.
THE POSESSOR AGREES TO THE FOLLOWING:
I TO MAINTAIN THIS DOCUMENT IN CONFIDENCE
II NOT TO REPRODUCE OR COPY IT
III NOT TO REVEAL OR PUBLISH IT IN WHOLE OR PART
IV ALL RIGHTS RESERVED

Thunderbolt TBD Left Current Sense (IULC)

Gain: 200x. EDP: 0.7 A
Rsense: 0.025 (R5640) or SHORT
Vsense: 17.5 mV, Range: 0.66 A

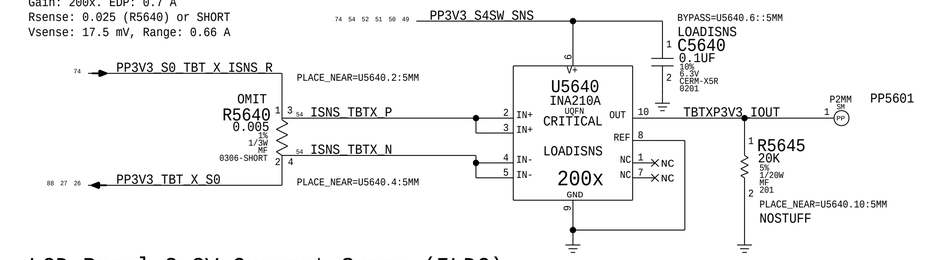

CPU Reg. ALSCAM, LCD 5V Current Sense (IC5C)

Gain: 200x. EDP: 0.42+0.1+0.1 A
Rsense: 0.025 (R5660) or SHORT
Vsense: 15.5 mV, Range: 0.60 A
PMU AMUX: A7

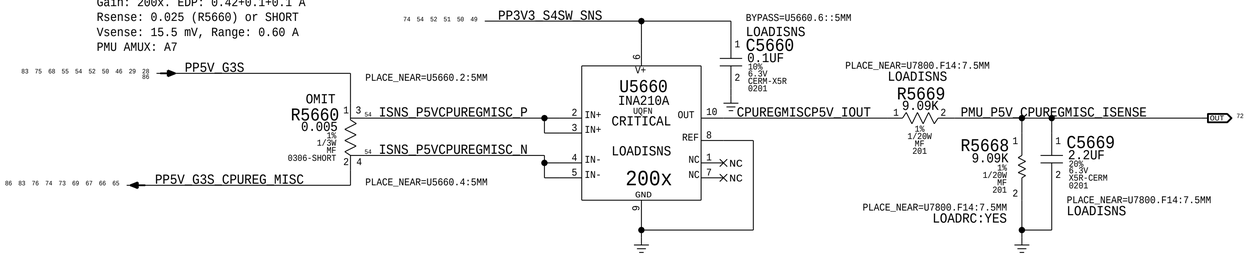

LCD Panel 3.3V Current Sense (ILDC)

Gain: 200x. EDP: 1 A
RSENSE: 0.01 (R8520) or SHORT
Vsense: 10 mV, Range: 1.5 A

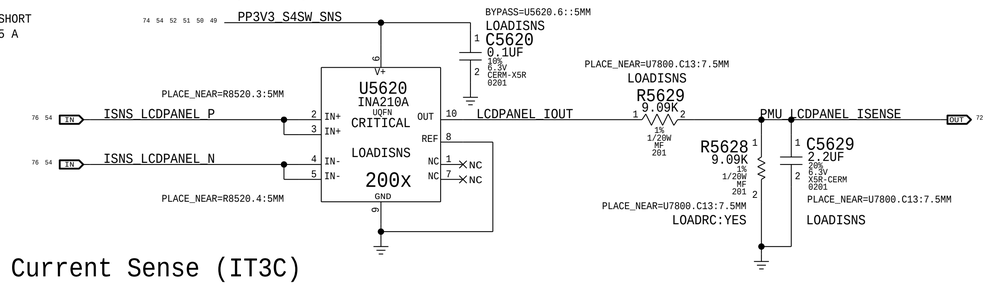

LPDDR 1.8V Current Sense (IM1C)

Gain: 200x. EDP: 0.45 A
Rsense: 0.005 (R5630) or SHORT
Vsense: 2.25 mV, Range: 3.3 A

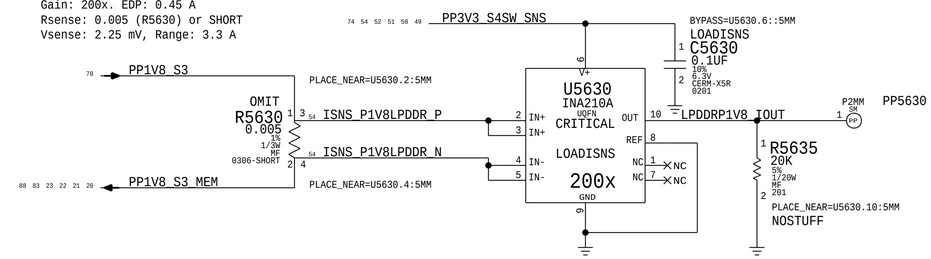

Trackpad 3V Current Sense (IT3C)

Gain: 200x, EDP: 0.05 A
Rsense: 0.1 (R5650) or SHORT
Vsense: 5 mV, Range: 0.17 A

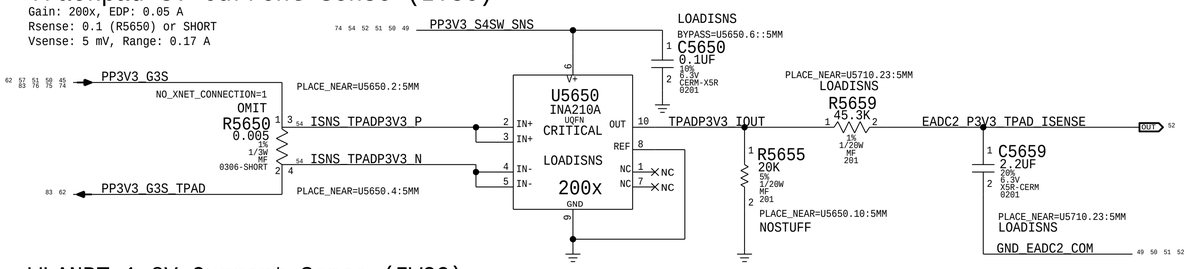

1.8V Standby Current Sense

Gain: None. EDP: 0.65 A
Rsense: 0.025 (R56B0) or SHORT
Vsense: 16.25 mV

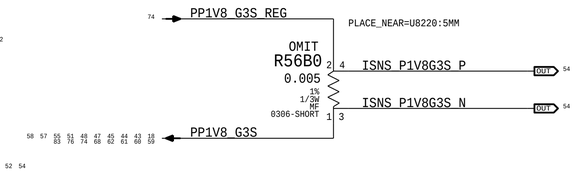

WLANBT 1.8V Current Sense (IW2C)

Gain: 200x, EDP: 0.0085 A
Rsense: 1 (R5680) or SHORT
Vsense: 8.5 mV, Range: 0.013 A
SMC ADC: 06

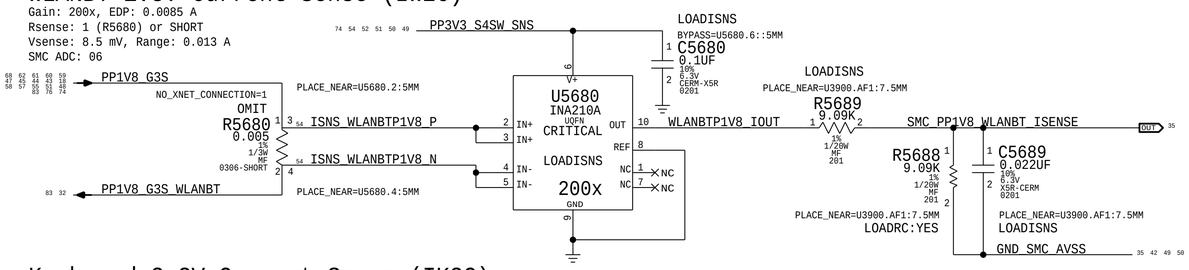

Keyboard 3.3V Current Sense (IK3C)

Gain: 200x, EDP: 0.043 A
Rsense: 0.1 (R5690) or SHORT
Vsense: 4.3 mV, Range: 0.17 A

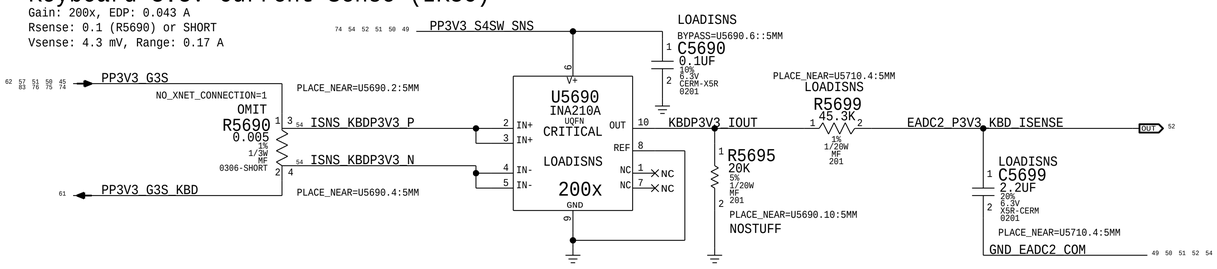

PART NUMBER	QTY	DESCRIPTION	REFERENCE DES	CRITICAL	BOM OPTION
117S0008	3	RES,MTL FLIM,100K,1/16W,0201,SMD,LF	R5628,R5668,R5688		LOADRC:NO

BOM_COST_GROUP=SENSORS

PAGE TITLE
POWER SENSORS EXTENDED

Apple Inc.

DRAWING NUMBER 051-05309
SIZE D
REVISION 6.0.0
BRANCH pvt
PAGE 56 OF 500
SHEET 51 OF 98

NOTICE OF PROPRIETARY PROPERTY:
THE INFORMATION CONTAINED HEREIN IS THE PROPRIETARY PROPERTY OF APPLE INC.
THE POSESSOR AGREES TO THE FOLLOWING:
I TO MAINTAIN THIS DOCUMENT IN CONFIDENCE
II NOT TO REPRODUCE OR COPY IT
III NOT TO REVEAL OR PUBLISH IT IN WHOLE OR PART
IV ALL RIGHTS RESERVED

Calpe 3.3V Input Current Left (IP3C)

Gain: 100x. EDP: 10.224 A
Rsense: 0.002 (R5780)
Vsense: 20.448 mV, Range: 12.5 A

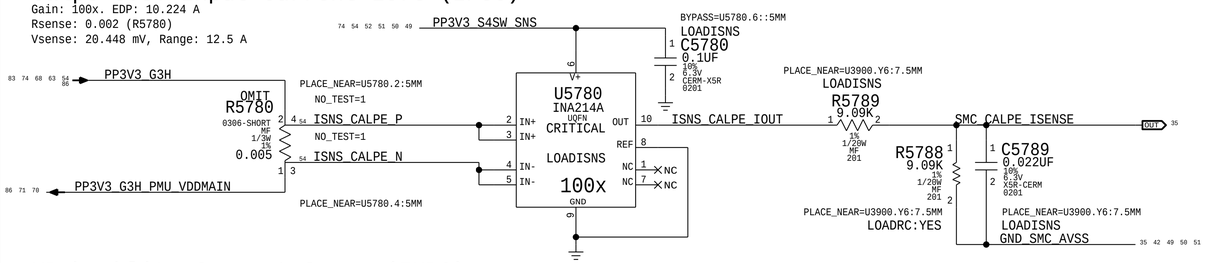

KB backlite Current Sense (IKBC)

Gain: 200x, EDP: 0.17 A
Rsense: 0.05 (R5730)
Vsense: 8.5 mV, Range: 0.33 A

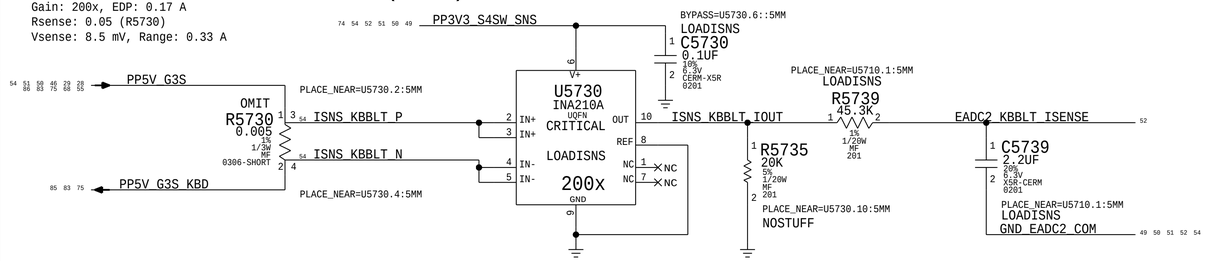

CPU SA Current Sense (ICSC)

Gain: 100X, EDP: 9.5 A
Rsense: 0.002 (R7270)
Vsense: 19 mV, Range: 15 A
PMU AMUX: B1

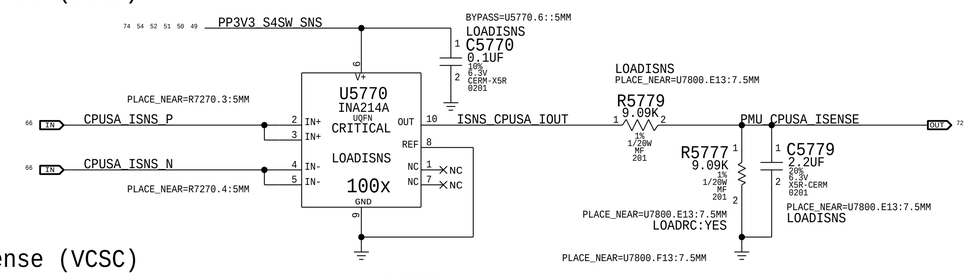

CPU SA Voltage Sense (VCSC)

PMU AMUX: B3

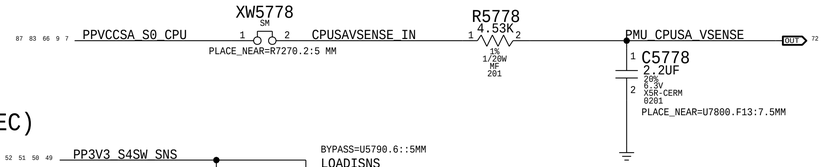

CPU EDRAM Current Sense (ICEC)

Gain: 200x, EDP: 6.2 A
Rsense: 0.002 (R7702) or SHORT
Vsense: 12.4 mV, Range: 7.5 A
PMU AMUX: A2

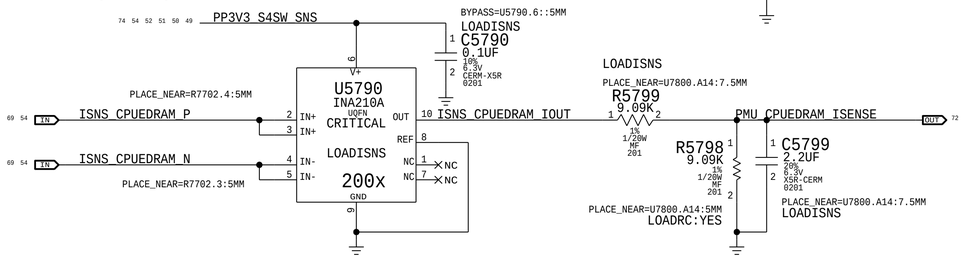

EADC2

(Write: 0x12 Read: 0x13)

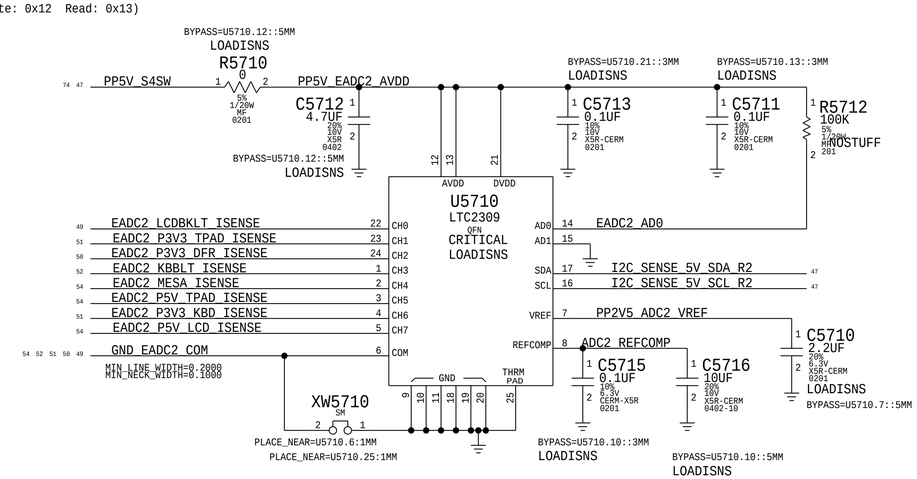

PART NUMBER	QTY	DESCRIPTION	REFERENCE DES	CRITICAL	BOM OPTION
117S0008	3	RES,MTL FLIM,100K,1/16W,0201,SMD,LF	R5777,R5788,R5798		LOADRC:NO

BOM_COST_GROUP=SENSORS

PAGE TITLE
POWER SENSORS EXTENDED 2

Apple Inc.

DRAWING NUMBER 051-05309
SIZE D
REVISION 6.0.0
BRANCH pvt
PAGE 57 OF 500
SHEET 52 OF 98

NOTICE OF PROPRIETARY PROPERTY:
THE INFORMATION CONTAINED HEREIN IS THE PROPRIETARY PROPERTY OF APPLE INC.
THE POSESSOR AGREES TO THE FOLLOWING:
I TO MAINTAIN THIS DOCUMENT IN CONFIDENCE
II NOT TO REPRODUCE OR COPY IT
III NOT TO REVEAL OR PUBLISH IT IN WHOLE OR PART
IV ALL RIGHTS RESERVED

Thermal Sensor A:
TBT Die, NAND, WIFI, I/O proximity

I2C Write: 0x90, I2C Read: 0x91

TBT Die Thermal Diode (TTLD)

Placement Note:
The P leg connects to THERMDA of TBT die.
The N leg connectd to GND pin close to THERMDA.

WIFI Proximity (TW0P)

Placement Note:
BOTTOM side of WIFI/BT module

NAND Proximity #1 (TH0b)

Placement note:
BOTTOM side between NAND devices

NAND Proximity #2 (TH0a)

Placement note:
TOP side between NAND devices

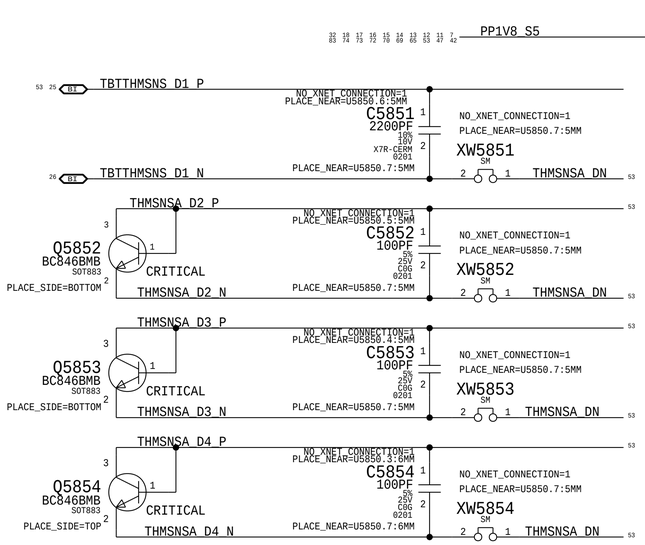

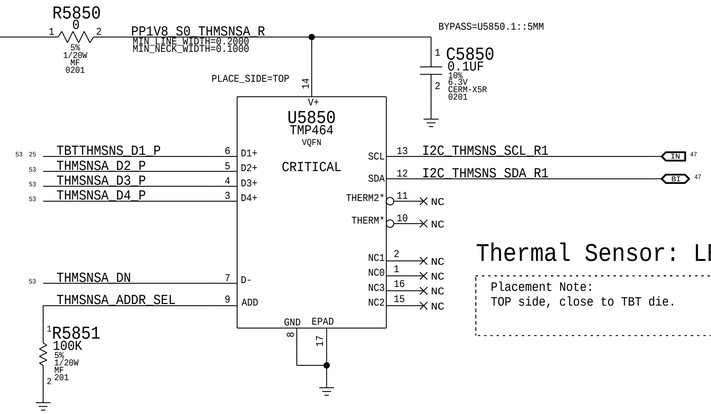

Thermal Sensor: LEFT IO proximity (TI0P)

Placement Note:
TOP side, close to TBT die.

Thermal Sensor B
Fin Stack, CPU Proximity, Memory Proximity, and CPU VR

I2C Write: 0x92, I2C Read: 0x93

Thermal Diode: Ambient (TMLB)

Placement Note:
Airflow thermal indicator, TOP side.

CPU Proximity (TC0P)

Placement Note:
TOP side of CPU.

Memory Proximity (TM0P)

Placement Note:
TOP side between main memory devices.

Memory Proximity (TM1P)

Placement Note:
BOTTOM side between main memory devices.

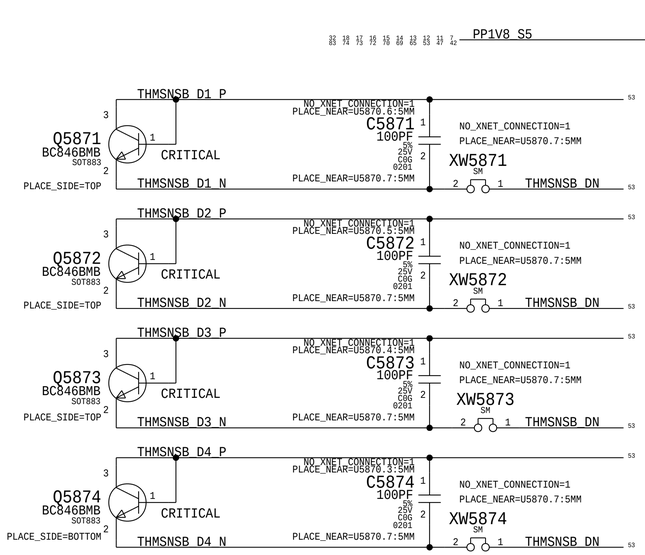

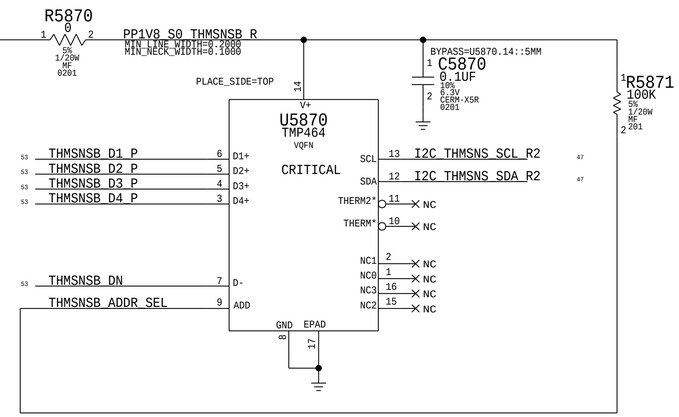

Thermal Sensor: Fin Stack (Th1H)

Placement Note:
TOP side, top right of MLB.

BOM_COST_GROUP=SENSORS

PAGE TITLE	THERMAL SENSORS
	Apple Inc.
DRAWING NUMBER	051-05309
SIZE	D
REVISION	6.0.0
BRANCH	pvt
PAGE	58 OF 500
SHEET	53 OF 98

NOTICE OF PROPRIETARY PROPERTY:
THE INFORMATION CONTAINED HEREIN IS THE PROPRIETARY PROPERTY OF APPLE INC.
THE POSESSOR AGREES TO THE FOLLOWING:
I TO MAINTAIN THIS DOCUMENT IN CONFIDENCE
II NOT TO REPRODUCE OR COPY IT
III NOT TO REVEAL OR PUBLISH IT IN WHOLE OR PART
IV ALL RIGHTS RESERVED

Trackpad 5V Current Sense (IT5C)

Gain: 200x, EDP: 0.0055 A
Rsense: 0.1 (R5940) or SHORT
Vsense: 0.55 mV, Range: 0.17 A

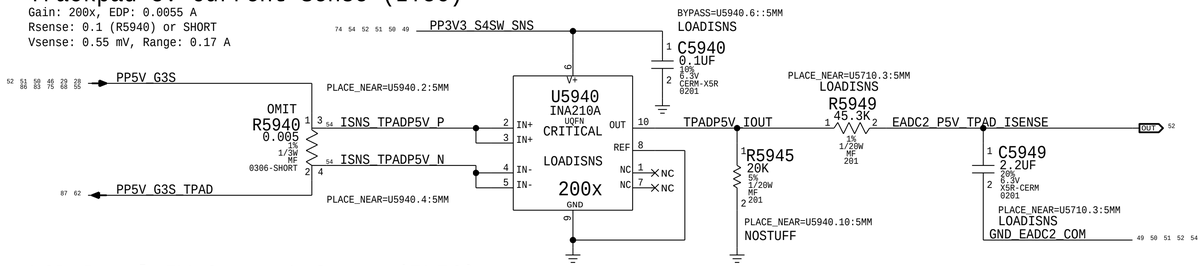

LCD Panel 5V Current Sense (IL5C)

Gain: 200x, EDP: 0.1 A
Rsense: 0.1 (R8521) or SHORT
Vsense: 10 mV, Range: 0.17 A

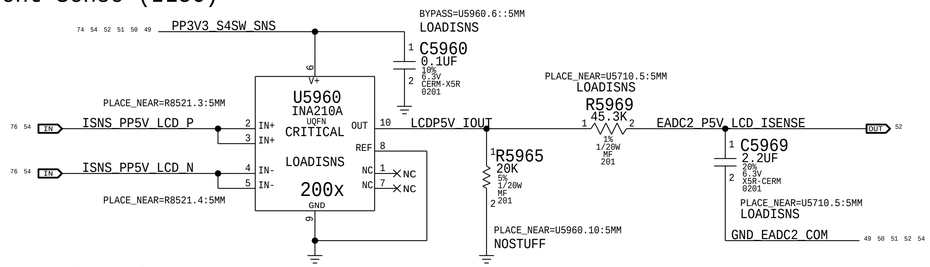

Ocarina Current Sense (IHCC)

Gain: 100x, EDP: 2.139 A
Rsense: 0.01 (R5920) [Production]
Vsense: 21.4 mV, Range: 3.0 A
MUX: A5

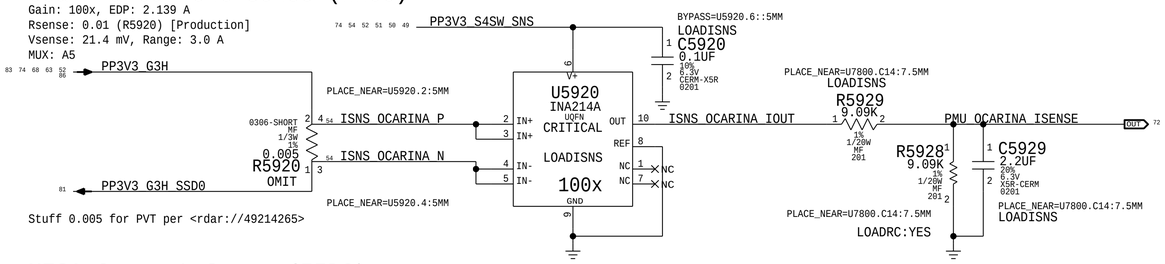

Stuff 0.005 for PVT per <rdar://49214265>

MESA Current Sense (IIDC)

Gain: 200x, EDP: 0.176 A
Rsense: 0.050 (R5530) or SHORT
Vsense: 8.8 mV, Range: 0.33 A

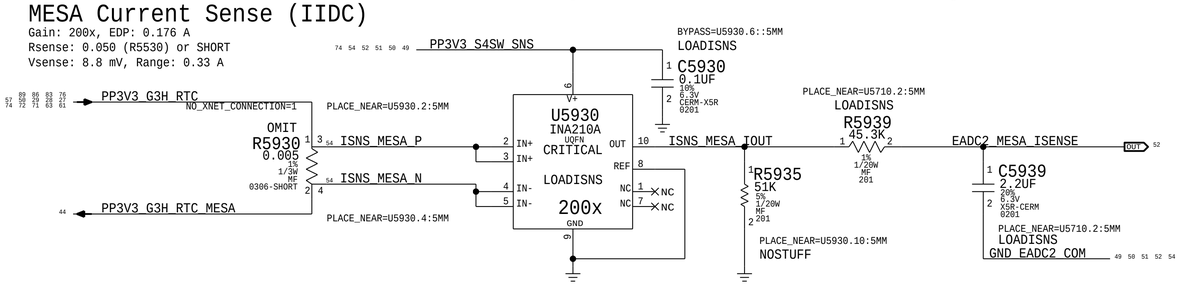

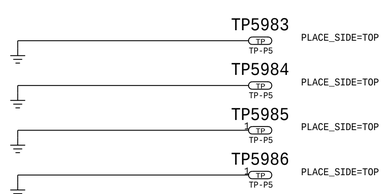

PART NUMBER	QTY	DESCRIPTION	REFERENCE DES	CRITICAL	BOM OPTION
117S0008	1	RES,MTL FLIM,100K,1/16W,0201,SMD,LF	R5928		LOADRC:NO

Probe Points for Power Validation

TP5901	ISNS_HS_CPU_P	PLACE_SIDE=TOP	PLACE_NEAR=R5400:5MM
TP5902	ISNS_HS_CPU_N	PLACE_SIDE=TOP	PLACE_NEAR=R5400:5MM
TP5903	ISNS_HS_OTHER5V_P	PLACE_SIDE=TOP	PLACE_NEAR=R5410:6MM
TP5904	ISNS_HS_OTHER5V_N	PLACE_SIDE=TOP	PLACE_NEAR=R5410:6MM
TP5905	ISNS_HS_OTHER3V3_P	PLACE_SIDE=TOP	PLACE_NEAR=R5440:5MM
TP5906	ISNS_HS_OTHER3V3_N	PLACE_SIDE=TOP	PLACE_NEAR=R5440:5MM
TP5907	ISNS_HS_3V3RTC_P	PLACE_SIDE=TOP	PLACE_NEAR=R5420:5MM
TP5908	ISNS_HS_3V3RTC_N	PLACE_SIDE=TOP	PLACE_NEAR=R5420:5MM
TP5909	ISNS_SSDNAND_P	PLACE_SIDE=TOP	PLACE_NEAR=R5460:5MM
TP5910	ISNS_SSDNAND_N	PLACE_SIDE=TOP	PLACE_NEAR=R5460:5MM
TP5911	ISNS_LCDBKLT_P	PLACE_SIDE=TOP	PLACE_NEAR=R8400:30MM
TP5912	ISNS_LCDBKLT_N	PLACE_SIDE=TOP	PLACE_NEAR=R8400:30MM
TP5913	ISNS_SPKRAMP_LEFT_P	PLACE_SIDE=TOP	PLACE_NEAR=R54A0:5MM
TP5914	ISNS_SPKRAMP_LEFT_N	PLACE_SIDE=TOP	PLACE_NEAR=R54A0:5MM
TP5915	ISNS_SPKRAMP_RIGHT_P	PLACE_SIDE=TOP	PLACE_NEAR=R54B0:5MM
TP5916	ISNS_SPKRAMP_RIGHT_N	PLACE_SIDE=TOP	PLACE_NEAR=R54B0:5MM
TP5917	CHGR_CSI_R_P	PLACE_SIDE=TOP	PLACE_NEAR=R7020:5MM
TP5918	CHGR_CSI_R_N	PLACE_SIDE=TOP	PLACE_NEAR=R7020:5MM
TP5919	CHGR_AMON	PLACE_SIDE=TOP	
TP5981		PLACE_SIDE=TOP	PLACE_NEAR=TP5919:5MM
TP5920	CHGR_CSO_R_P	PLACE_SIDE=TOP	PLACE_NEAR=R7060:30MM
TP5921	CHGR_CSO_R_N	PLACE_SIDE=TOP	PLACE_NEAR=R7060:30MM
TP5922	CHGR_BMON	PLACE_SIDE=TOP	
TP5982		PLACE_SIDE=TOP	PLACE_NEAR=TP5922:5MM
TP5923	PVCCIOS0_CS_P	PLACE_SIDE=TOP	PLACE_NEAR=R8102:5MM
TP5924	PVCCIOS0_CS_N	PLACE_SIDE=TOP	PLACE_NEAR=R8102:5MM
TP5925	ISNS_CPUDDR_P	PLACE_SIDE=TOP	PLACE_NEAR=R8118:5MM
TP5926	ISNS_CPUDDR_N	PLACE_SIDE=TOP	PLACE_NEAR=R8118:5MM
TP5927	ISNS_CPUVDDQ_P	PLACE_SIDE=TOP	PLACE_NEAR=R5510:5MM
TP5928	ISNS_CPUVDDQ_N	PLACE_SIDE=TOP	PLACE_NEAR=R5510:5MM
TP5929	ISNS_DFR3V3_P	PLACE_SIDE=TOP	PLACE_NEAR=R5520:5MM
TP5930	ISNS_DFR3V3_N	PLACE_SIDE=TOP	PLACE_NEAR=R5520:5MM
TP5931	ISNS_WLANBTP3V3_P	PLACE_SIDE=TOP	PLACE_NEAR=R5530:5MM
TP5932	ISNS_WLANBTP3V3_N	PLACE_SIDE=TOP	PLACE_NEAR=R5530:5MM
TP5933	ISNS_CPUVR_P	PLACE_SIDE=TOP	PLACE_NEAR=R5542:30MM
TP5934	ISNS_CPUVR_N	PLACE_SIDE=TOP	PLACE_NEAR=R5543:30MM
TP5935	ISNS_CPUGT_P	PLACE_SIDE=TOP	PLACE_NEAR=R5582:10MM
TP5936	ISNS_CPUGT_N	PLACE_SIDE=TOP	PLACE_NEAR=R5583:10MM
TP5937	ISNS_TBTX_P	PLACE_SIDE=TOP	PLACE_NEAR=R5640:5MM
TP5938	ISNS_TBTX_N	PLACE_SIDE=TOP	PLACE_NEAR=R5640:5MM
TP5939	ISNS_LCDPANEL_P	PLACE_SIDE=TOP	PLACE_NEAR=R8520:5MM
TP5940	ISNS_LCDPANEL_N	PLACE_SIDE=TOP	PLACE_NEAR=R8520:5MM
TP5941	ISNS_TPADP3V3_P	PLACE_SIDE=TOP	PLACE_NEAR=R5650:10MM
TP5942	ISNS_TPADP3V3_N	PLACE_SIDE=TOP	PLACE_NEAR=R5650:10MM
TP5943	ISNS_WLANBTP1V8_P	PLACE_SIDE=TOP	PLACE_NEAR=R5680:5MM
TP5944	ISNS_WLANBTP1V8_N	PLACE_SIDE=TOP	PLACE_NEAR=R5680:5MM
TP5945	ISNS_CALPE_P	PLACE_SIDE=TOP	PLACE_NEAR=R5780:5MM
TP5946	ISNS_CALPE_N	PLACE_SIDE=TOP	PLACE_NEAR=R5780:5MM
TP5947	ISNS_KBBLT_P	PLACE_SIDE=TOP	PLACE_NEAR=R5730:5MM
TP5948	ISNS_KBBLT_N	PLACE_SIDE=TOP	PLACE_NEAR=R5730:5MM
TP5949	CPUSA_ISNS_R_P	PLACE_SIDE=TOP	PLACE_NEAR=R7274:5MM
TP5950	CPUSA_ISNS_R_N	PLACE_SIDE=TOP	PLACE_NEAR=R7272:5MM
TP5951	ISNS_CPUEDRAM_P		PLACE_NEAR=R7702:5MM
TP5952	ISNS_CPUEDRAM_N		PLACE_NEAR=R7702:5MM
TP5953	ISNS_TPADP5V_P	PLACE_SIDE=TOP	PLACE_NEAR=R5940:10MM
TP5954	ISNS_TPADP5V_N	PLACE_SIDE=TOP	PLACE_NEAR=R5940:10MM
TP5955	ISNS_PP5V_LCD_P	PLACE_SIDE=TOP	PLACE_NEAR=R8521:5MM
TP5956	ISNS_PP5V_LCD_N	PLACE_SIDE=TOP	PLACE_NEAR=R8521:5MM
TP5957	ISNS_OCARINA_P	PLACE_SIDE=TOP	PLACE_NEAR=R5920:5MM
TP5958	ISNS_OCARINA_N	PLACE_SIDE=TOP	PLACE_NEAR=R5920:5MM
TP5959	ISNS_MESA_P	PLACE_SIDE=TOP	PLACE_NEAR=R5930:5MM
TP5960	ISNS_MESA_N	PLACE_SIDE=TOP	PLACE_NEAR=R5930:5MM
TP5961	PPVPCORE_S5	PLACE_SIDE=TOP	PLACE_NEAR=L820:5MM
TP5962	PVCC_FB_P	PLACE_SIDE=TOP	PLACE_NEAR=R0850:10MM
TP5963	PP1V_PRIM	PLACE_SIDE=TOP	PLACE_NEAR=L7821:5MM
TP5964	P1VPRIM_FB_R	PLACE_SIDE=TOP	PLACE_NEAR=R0853:10MM
TP5965	ISNS_KBDP3V3_P	PLACE_SIDE=TOP	PLACE_NEAR=R5690:5MM
TP5966	ISNS_KBDP3V3_N	PLACE_SIDE=TOP	PLACE_NEAR=R5690:5MM
TP5967	ISNS_P5VCPUREGMISC_P	PLACE_SIDE=TOP	PLACE_NEAR=R5660:5MM
TP5968	ISNS_P5VCPUREGMISC_N	PLACE_SIDE=TOP	PLACE_NEAR=R5660:5MM
TP5969	ISNS_P1V8LPDDR_P	PLACE_SIDE=TOP	PLACE_NEAR=R5630:5MM
TP5970	ISNS_P1V8LPDDR_N	PLACE_SIDE=TOP	PLACE_NEAR=R5630:5MM
TP5971	ISNS_P1V8G3S_P	PLACE_SIDE=TOP	PLACE_NEAR=R56B0:5MM
TP5972	ISNS_P1V8G3S_N	PLACE_SIDE=TOP	PLACE_NEAR=R56B0:5MM

BOM_COST_GROUP=SENSORS

PAGE TITLE
POWER SENSORS EXTENDED 3

Apple Inc.

DRAWING NUMBER 051-05309 SIZE D
REVISION 6.0.0
BRANCH pvt
PAGE 59 OF 500
SHEET 54 OF 98

NOTICE OF PROPRIETARY PROPERTY:
THE INFORMATION CONTAINED HEREIN IS THE PROPRIETARY PROPERTY OF APPLE INC.
THE POSESSOR AGREES TO THE FOLLOWING:
I TO MAINTAIN THIS DOCUMENT IN CONFIDENCE
II NOT TO REPRODUCE OR COPY IT
III NOT TO REVEAL OR PUBLISH IT IN WHOLE OR PART
IV ALL RIGHTS RESERVED

FAN CONTROL

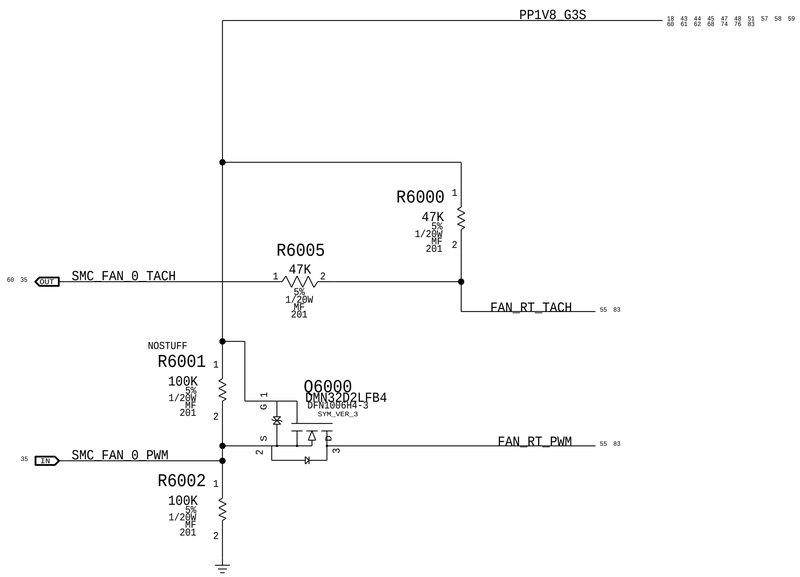

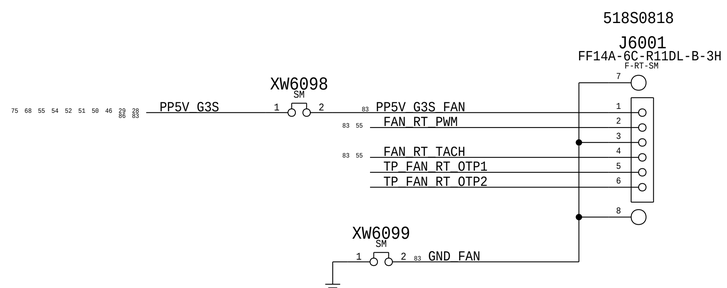

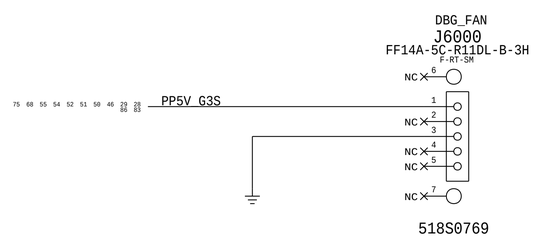

BOM_COST_GROUP=FAN

PAGE TITLE	Fans/SMC/AMUX Support
	Apple Inc.
DRAWING NUMBER	051-05309
SIZE	D
REVISION	6.0.0
BRANCH	pvt
PAGE	60 OF 500
SHEET	55 OF 98

NOTICE OF PROPRIETARY PROPERTY:
THE INFORMATION CONTAINED HEREIN IS THE PROPRIETARY PROPERTY OF APPLE INC.
THE POSESSOR AGREES TO THE FOLLOWING:
I TO MAINTAIN THIS DOCUMENT IN CONFIDENCE
II NOT TO REPRODUCE OR COPY IT
III NOT TO REVEAL OR PUBLISH IT IN WHOLE OR PART
IV ALL RIGHTS RESERVED

BOM_COST_GROUP=AUDIO

SYNC_MASTER= SYNC_DATE=

PAGE TITLE

AUDIO PLACEHOLDER

Apple Inc.

DRAWING NUMBER 051-05309

SIZE D

REVISION 6.0.0

BRANCH pvt

PAGE 62 OF 500

SHEET 56 OF 98

NOTICE OF PROPRIETARY PROPERTY:

THE INFORMATION CONTAINED HEREIN IS THE
PROPRIETARY PROPERTY OF APPLE INC.
THE POSESSOR AGREES TO THE FOLLOWING:
I TO MAINTAIN THIS DOCUMENT IN CONFIDENCE
II NOT TO REPRODUCE OR COPY IT
III NOT TO REVEAL OR PUBLISH IT IN WHOLE OR PART
IV ALL RIGHTS RESERVED

AUDIO JACK CODEC I2C ADDRESS		
AD1	AD0	ADDRESS
GND	GND	0x48 <--
GND	1.8V	0x49
1.8V	GND	0x4A
1.8V	1.8V	0x4B

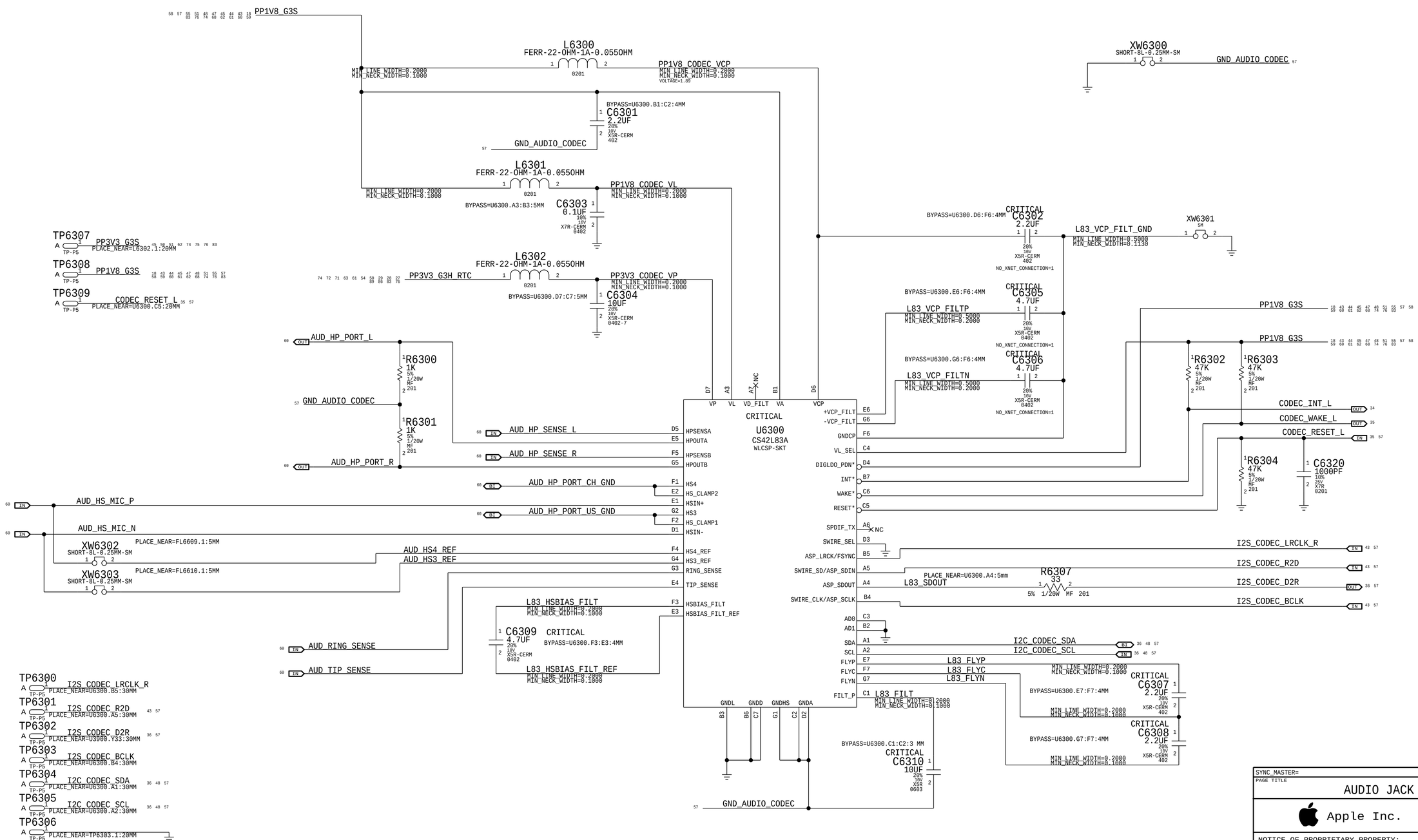

SYNC_MASTER= SYNC_DATE=

PAGE TITLE

AUDIO JACK CODEC

Apple Inc.

DRAWING NUMBER 051-05309 SIZE D

REVISION 6.0.0

BRANCH pvt

PAGE 63 OF 500

SHEET 57 OF 98

NOTICE OF PROPRIETARY PROPERTY:

THE INFORMATION CONTAINED HEREIN IS THE PROPRIETARY PROPERTY OF APPLE INC. THE POSESSOR AGREES TO THE FOLLOWING:

I TO MAINTAIN THIS DOCUMENT IN CONFIDENCE

II NOT TO REPRODUCE OR COPY IT

III NOT TO REVEAL OR PUBLISH IT IN WHOLE OR PART

IV ALL RIGHTS RESERVED

2X MONO SPEAKER LEFT AMPLIFIERS

APN: 353S01252
GAIN: 0DBFS = xxVRMS

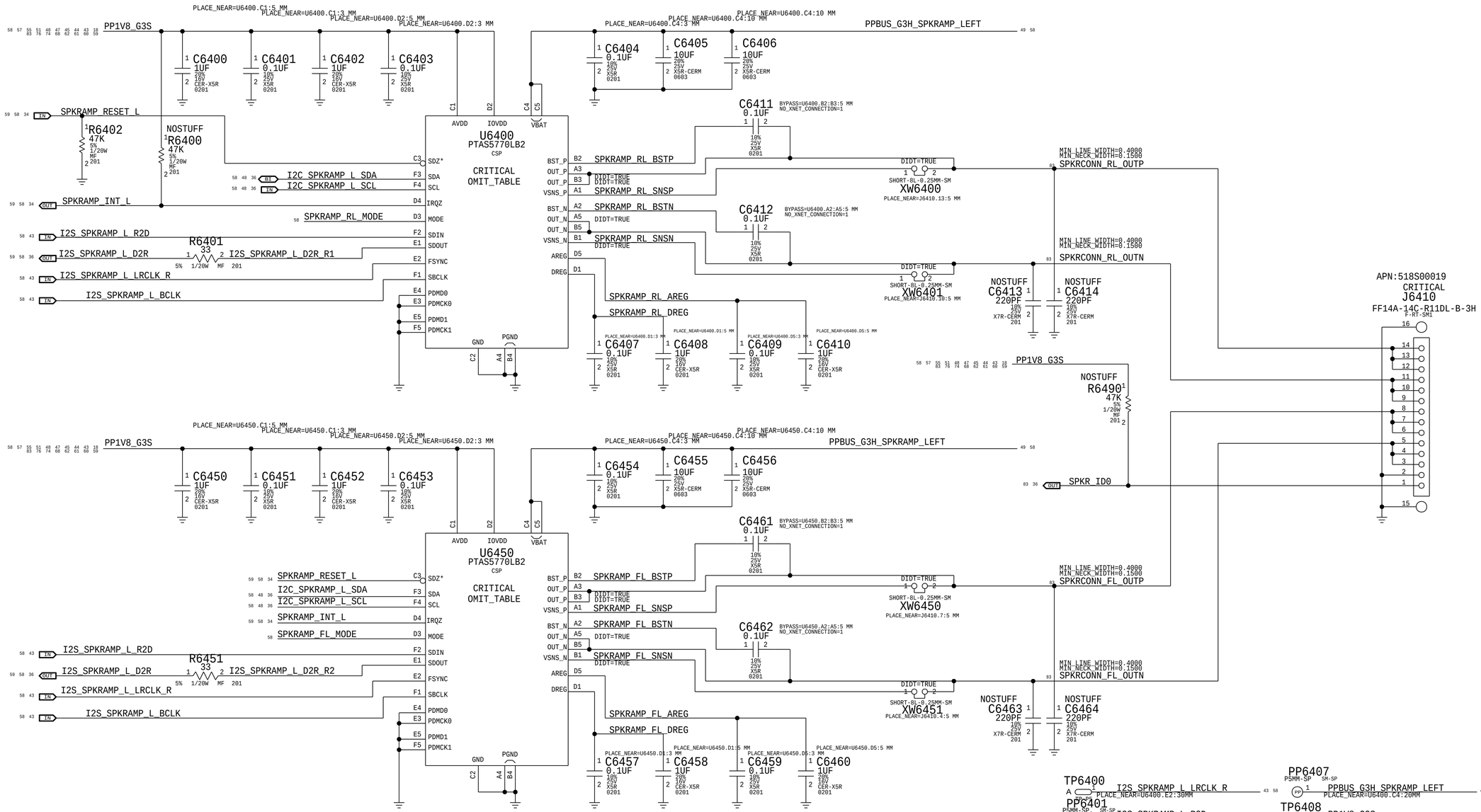

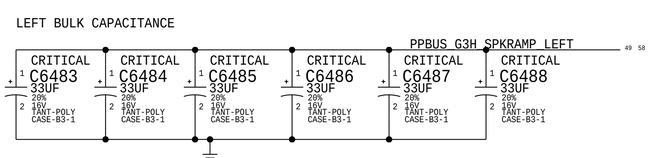

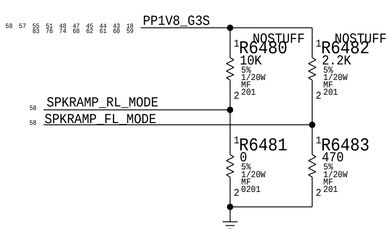

MODE PIN	I2C ADDR	CHANNEL
GND	0x31	REAR LEFT
470 to GND	0x32	FRONT LEFT
470 to IOVDD	0x33	REAR RIGHT
2k2 to GND	0x34	FRONT RIGHT
2k2 to IOVDD	0x35	
10k to GND	0x36	
10k to IOVDD	0x37	
47k to IOVDD	0x38	

TP6400 I2S_SPKRAMP_L_LRCLK_R
PP6401 I2S_SPKRAMP_L_R2D
PP6402 I2S_SPKRAMP_L_D2R
PP6403 I2S_SPKRAMP_L_BCLK
TP6404 I2C_SPKRAMP_L_SDA
TP6405 I2C_SPKRAMP_L_SCL
TP6406
PP6407 PPBUS_G3H_SPKRAMP_LEFT
TP6408 PP1V8_G3S
TP6409 SPKRAMP_RESET_L

BOM_COST_GROUP=AUDIO

SYNC_MASTER= SYNC_DATE=
PAGE TITLE
AUDIO LEFT AMPLIFIERS

Apple Inc.

DRAWING NUMBER 051-05309 SIZE D
REVISION 6.0.0
BRANCH pvt
PAGE 64 OF 500
SHEET 58 OF 98

NOTICE OF PROPRIETARY PROPERTY:
THE INFORMATION CONTAINED HEREIN IS THE PROPRIETARY PROPERTY OF APPLE INC.
THE POSESSOR AGREES TO THE FOLLOWING:
I TO MAINTAIN THIS DOCUMENT IN CONFIDENCE
II NOT TO REPRODUCE OR COPY IT
III NOT TO REVEAL OR PUBLISH IT IN WHOLE OR PART
IV ALL RIGHTS RESERVED

2X MONO SPEAKER RIGHT AMPLIFIERS

APN: 353S01252
GAIN: 0DBFS = xxVRMS

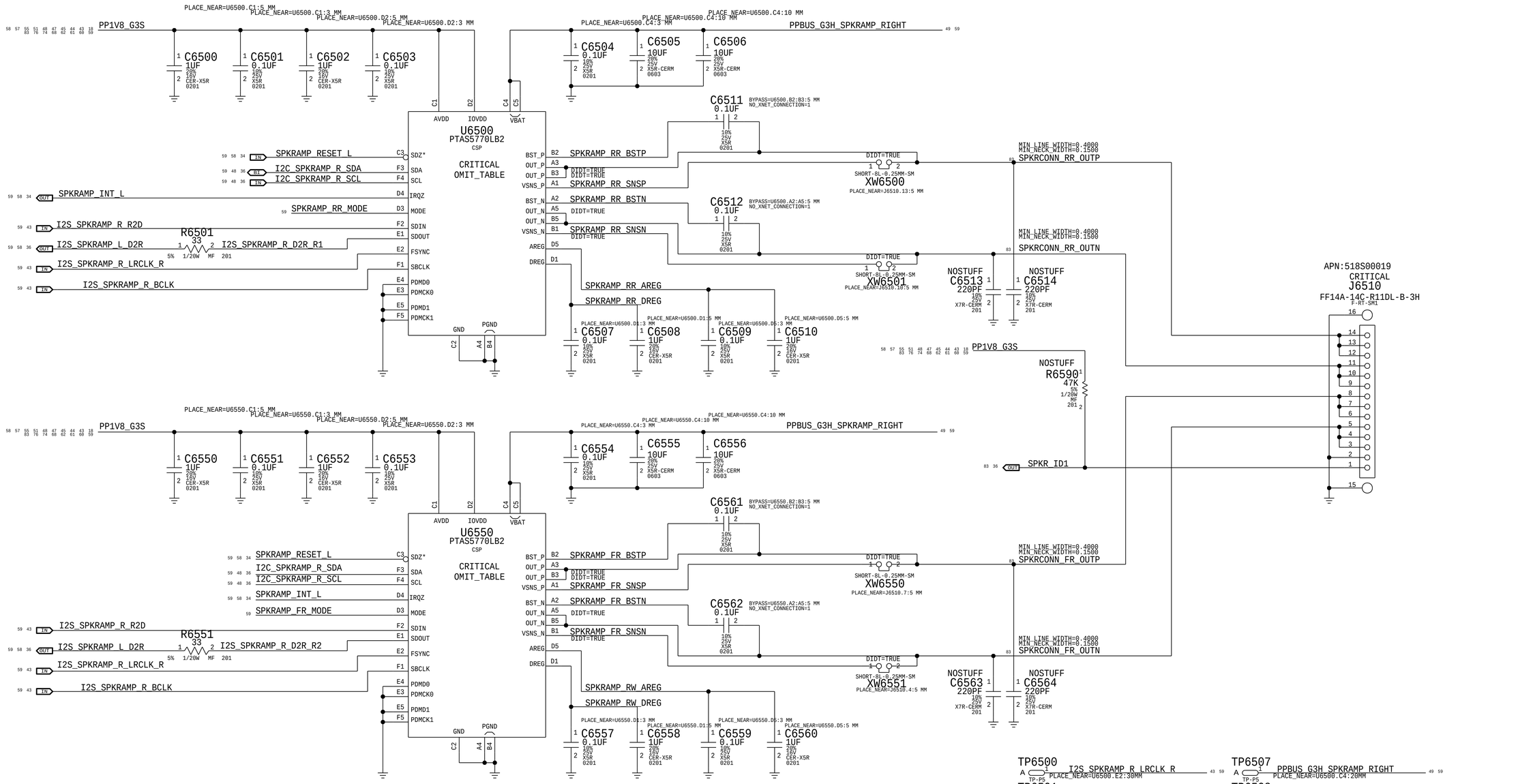

MODE PIN	I2C ADDR	CHANNEL
GND	0x31	LEFT REAR
470 to GND	0x32	LEFT FRONT
470 to IOVDD	0x33	RIGHT REAR
2K2 to GND	0x34	RIGHT FRONT
2K2 to IOVDD	0x35	
10K to GND	0x36	
10K to IOVDD	0x37	
47K to IOVDD	0x38	

SYNC_MASTER= SYNC_DATE=
PAGE TITLE
AUDIO RIGHT AMPLIFIERS

Apple Inc.

DRAWING NUMBER 051-05309
SIZE D
REVISION 6.0.0
BRANCH pvt
PAGE 65 OF 500
SHEET 59 OF 98

NOTICE OF PROPRIETARY PROPERTY:
THE INFORMATION CONTAINED HEREIN IS THE PROPRIETARY PROPERTY OF APPLE INC.
THE POSESSOR AGREES TO THE FOLLOWING:
I TO MAINTAIN THIS DOCUMENT IN CONFIDENCE
II NOT TO REPRODUCE OR COPY IT
III NOT TO REVEAL OR PUBLISH IT IN WHOLE OR PART
IV ALL RIGHTS RESERVED

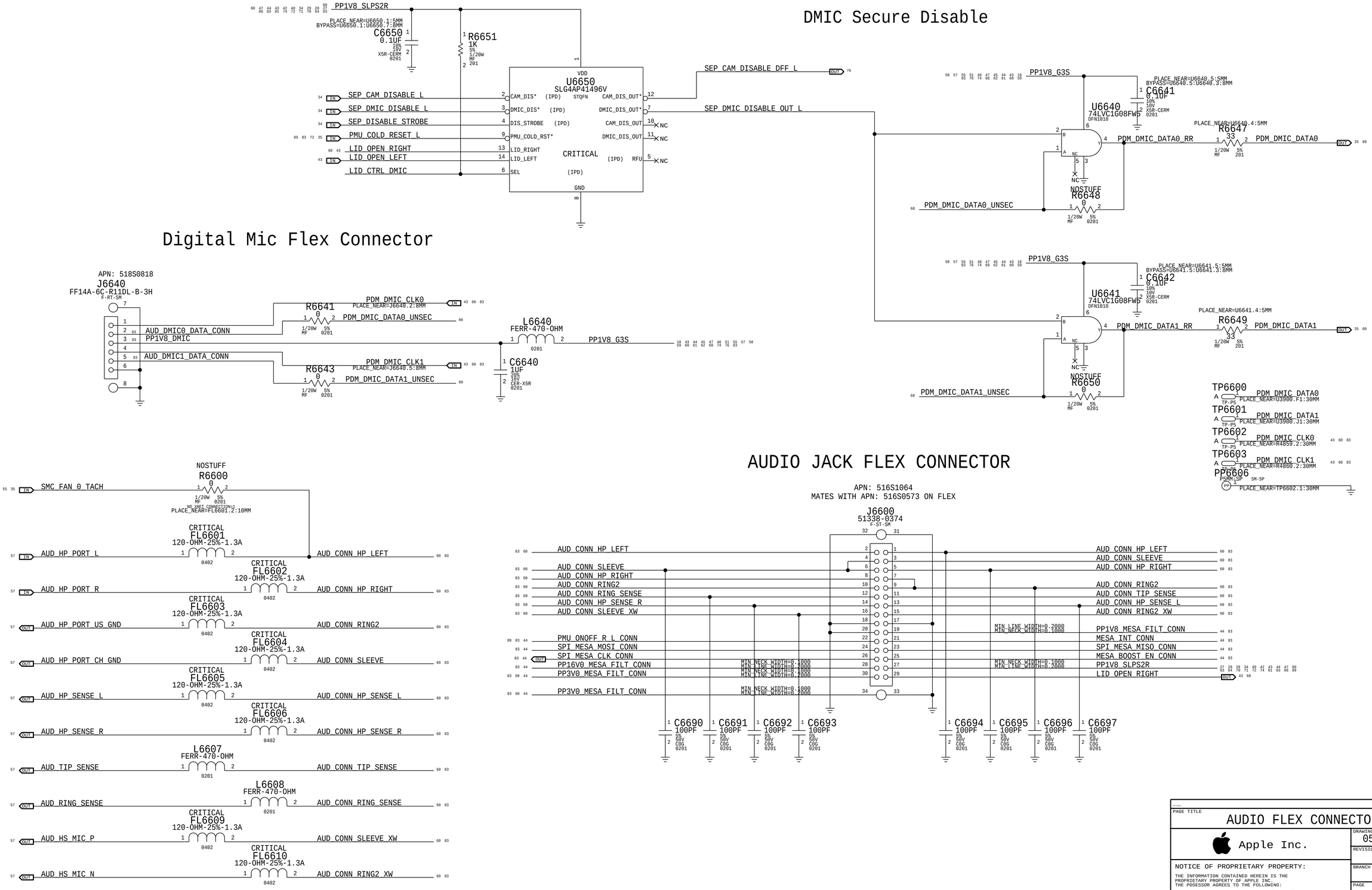

PAGE TITLE

AUDIO FLEX CONNECTORS

Apple Inc.

DRAWING NUMBER	051-05309
SIZE	D
REVISION	6.0.0
BRANCH	pvt
PAGE	66 OF 500
SHEET	60 OF 98

NOTICE OF PROPRIETARY PROPERTY:
THE INFORMATION CONTAINED HEREIN IS THE PROPRIETARY PROPERTY OF APPLE INC.
THE POSESSOR AGREES TO THE FOLLOWING:
I TO MAINTAIN THIS DOCUMENT IN CONFIDENCE
II NOT TO REPRODUCE OR COPY IT
III NOT TO REVEAL OR PUBLISH IT IN WHOLE OR PART
IV ALL RIGHTS RESERVED

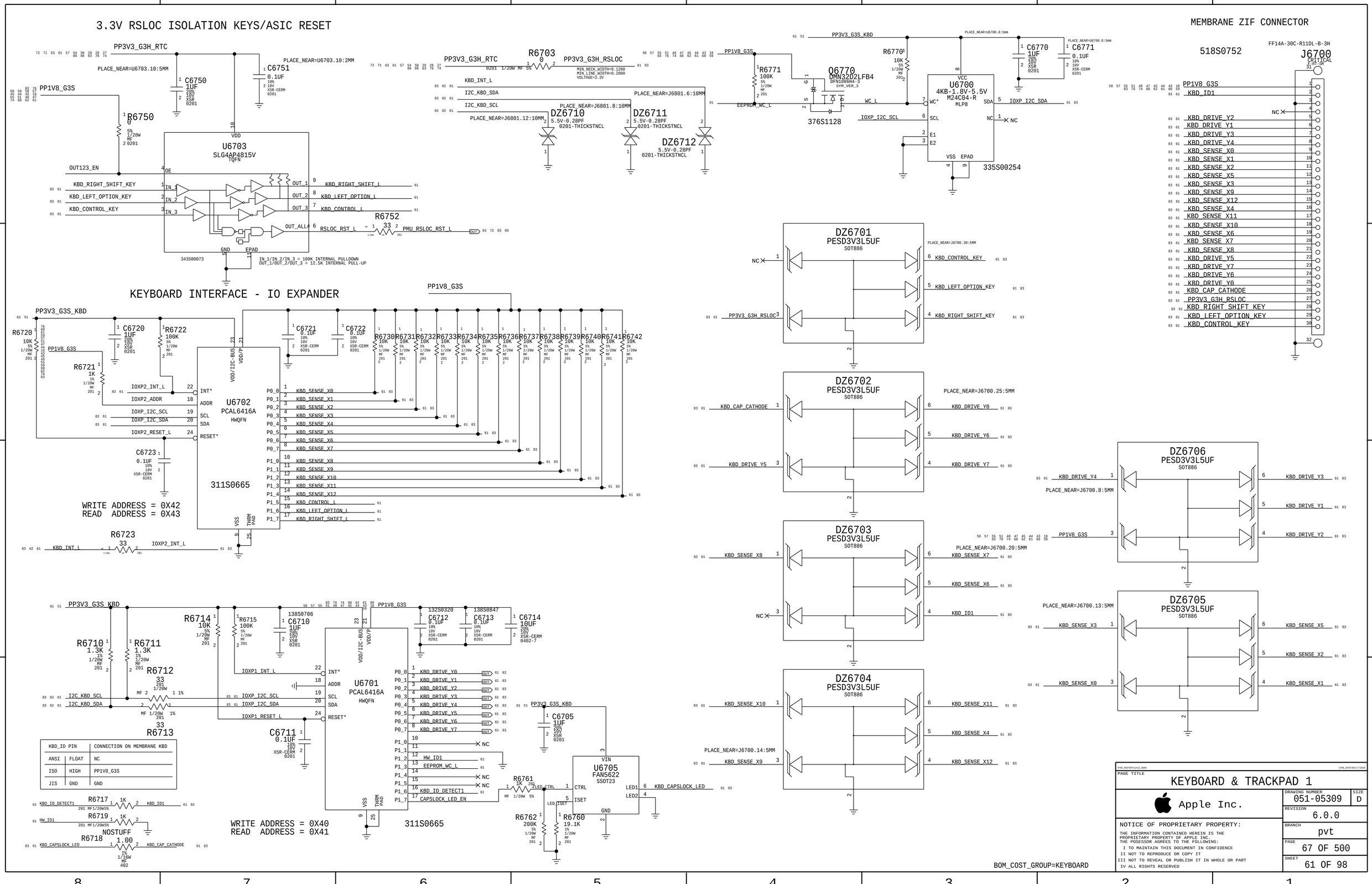
3.3V RSLOC ISOLATION KEYS/ASIC RESET
U6703
SLG4AP4815V
TQFN
343S00073
R6750
R6751
C6750
C6751
R6752
R6703
DZ6710
DZ6711
DZ6712
R6770
R6771
Q6770
DMN32D2LFB4
376S1128
U6700
4KB-1.8V-5.5V
M24C04-R
MLP8
335S00254
C6770
C6771
MEMBRANE ZIF CONNECTOR
518S0752
FF14A-30C-R11DL-B-3H
J6700
KEYBOARD INTERFACE - IO EXPANDER
U6702
PCAL6416A
HWQFN
311S0665
WRITE ADDRESS = 0X42
READ ADDRESS = 0X43
R6723
R6720
R6721
R6722
C6720
C6721
C6722
C6723
R6730
R6731
R6732
R6733
R6734
R6735
R6736
R6737
R6738
R6739
R6740
R6741
R6742
DZ6701
PESD3V3L5UF
SOT886
DZ6702
DZ6703
DZ6704
DZ6705
DZ6706
U6701
PCAL6416A
HWQFN
311S0665
WRITE ADDRESS = 0X40
READ ADDRESS = 0X41
R6710
R6711
R6712
R6713
R6714
R6715
C6710
C6711
C6712
C6713
C6714
C6705
R6717
R6719
R6718
NOSTUFF
R6761
R6762
R6760
U6705
FAN5622
SSOT23
KBD_ID PIN
CONNECTION ON MEMBRANE KBD
ANSI
FLOAT
NC
ISO
HIGH
PP1V8_G3S
JIS
GND
GND
BOM_COST_GROUP=KEYBOARD
PAGE TITLE
KEYBOARD & TRACKPAD 1
Apple Inc.
NOTICE OF PROPRIETARY PROPERTY:
THE INFORMATION CONTAINED HEREIN IS THE PROPRIETARY PROPERTY OF APPLE INC.
THE POSESSOR AGREES TO THE FOLLOWING:
I TO MAINTAIN THIS DOCUMENT IN CONFIDENCE
II NOT TO REPRODUCE OR COPY IT
III NOT TO REVEAL OR PUBLISH IT IN WHOLE OR PART
IV ALL RIGHTS RESERVED
DRAWING NUMBER
051-05309
SIZE
D
REVISION
6.0.0
BRANCH
pvt
PAGE
67 OF 500
SHEET
61 OF 98

Trackpad Level Shifting

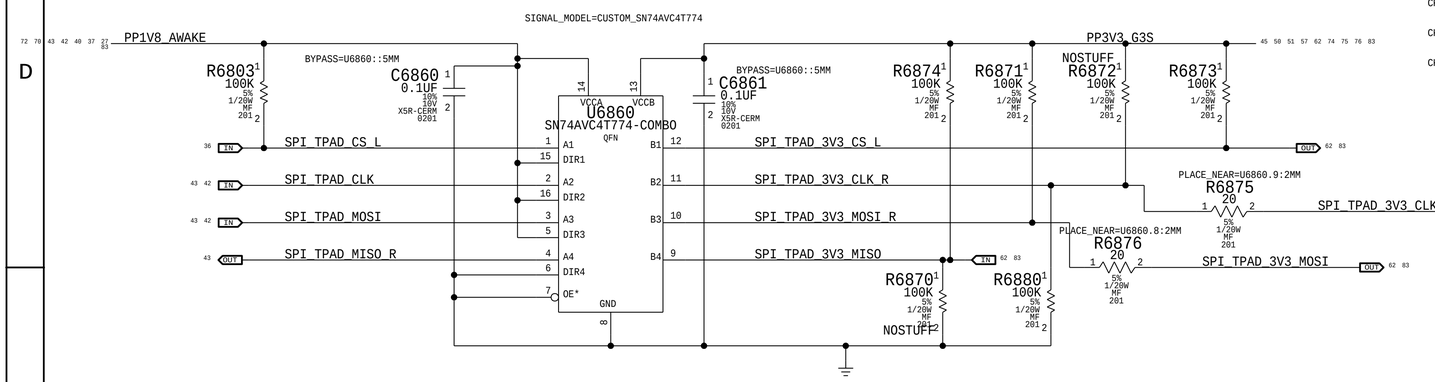

TPAD CONNECTOR

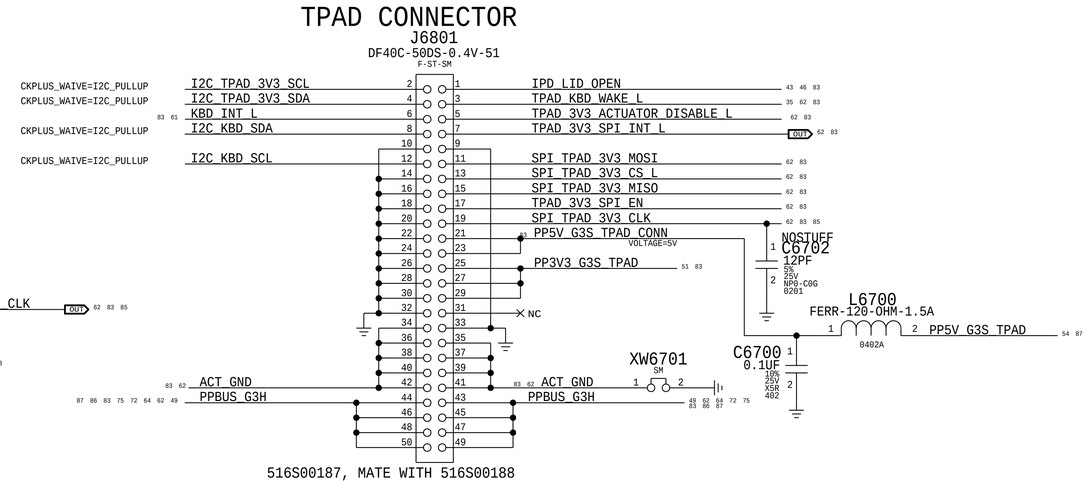

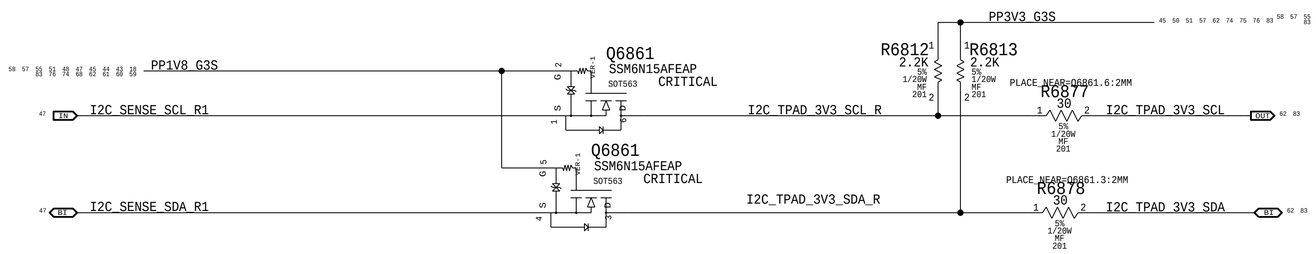

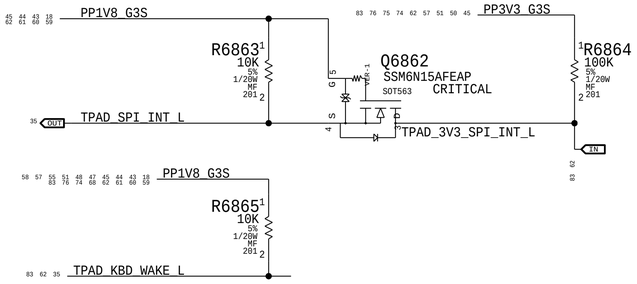

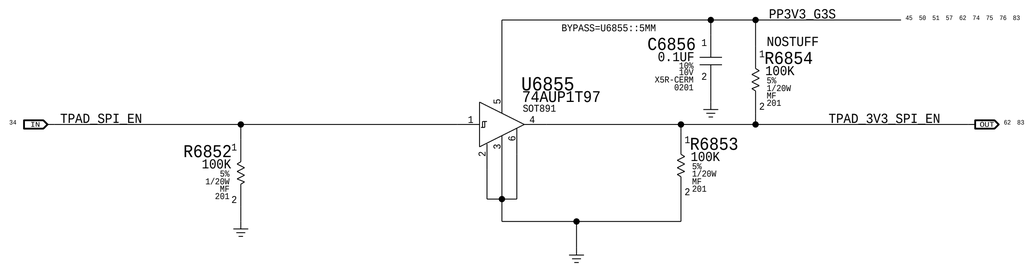

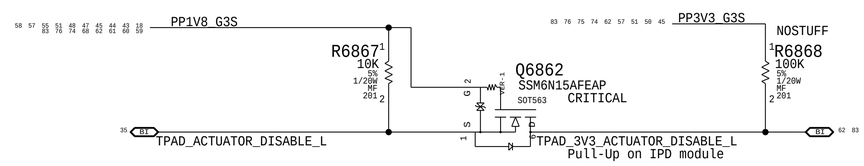

BOM_COST_GROUP=TRACKPAD

PAGE TITLE	Keyboard & Trackpad 2
	Apple Inc.
DRAWING NUMBER	051-05309
SIZE	D
REVISION	6.0.0
BRANCH	pvt
PAGE	68 OF 500
SHEET	62 OF 98

NOTICE OF PROPRIETARY PROPERTY:
THE INFORMATION CONTAINED HEREIN IS THE PROPRIETARY PROPERTY OF APPLE INC.
THE POSESSOR AGREES TO THE FOLLOWING:
I TO MAINTAIN THIS DOCUMENT IN CONFIDENCE
II NOT TO REPRODUCE OR COPY IT
III NOT TO REVEAL OR PUBLISH IT IN WHOLE OR PART
IV ALL RIGHTS RESERVED

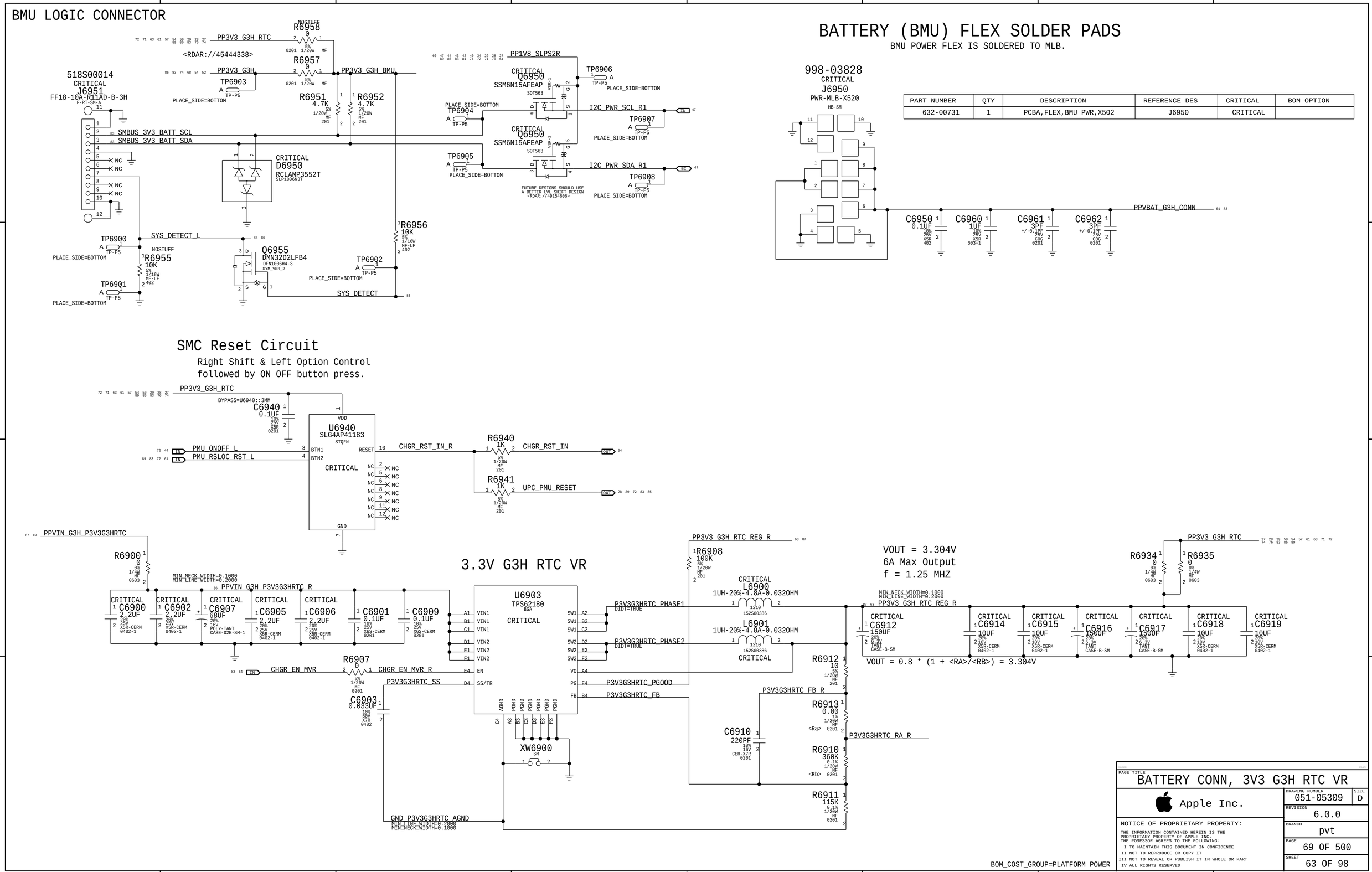
BMU LOGIC CONNECTOR
518S00014
CRITICAL
J6951
FF18-10A-R11AD-B-3H
F-RT-SM-A
PP3V3_G3H_RTC
R6958
0
5%
1/20W
MF
0201
NOSTUFF
<RDAR://45444338>
R6957
0
PP3V3_G3H
PP3V3_G3H_BMU
TP6903
TP-P5
PLACE_SIDE=BOTTOM
R6951
4.7K
R6952
4.7K
SMBUS_3V3_BATT_SCL
SMBUS_3V3_BATT_SDA
NC
CRITICAL
D6950
RCLAMP3552T
SLP1006N3T
TP6900
TP6901
SYS_DETECT_L
R6955
10K
1/16W
MF-LF
402
Q6955
DMN32D2LFB4
DFN1006H4-3
SYM_VER_2
R6956
10K
TP6902
SYS_DETECT
PP1V8_SLPS2R
TP6906
CRITICAL
Q6950
SSM6N15AFEAP
SOT563
TP6904
I2C_PWR_SCL_R1
TP6907
TP6905
I2C_PWR_SDA_R1
TP6908
FUTURE DESIGNS SHOULD USE
A BETTER LVL SHIFT DESIGN
<RDAR://49154606>
BATTERY (BMU) FLEX SOLDER PADS
BMU POWER FLEX IS SOLDERED TO MLB.
998-03828
CRITICAL
J6950
PWR-MLB-X520
HB-SM
PPVBAT_G3H_CONN
C6950
0.1UF
C6960
1UF
C6961
3PF
C6962
3PF
SMC Reset Circuit
Right Shift & Left Option Control
followed by ON OFF button press.
PP3V3_G3H_RTC
BYPASS=U6940::3MM
C6940
0.1UF
U6940
SLG4AP41183
STQFN
VDD
GND
BTN1
BTN2
RESET
PMU_ONOFF_L
PMU_RSLOC_RST_L
CHGR_RST_IN_R
R6940
1K
CHGR_RST_IN
R6941
1K
UPC_PMU_RESET
3.3V G3H RTC VR
PPVIN_G3H_P3V3G3HRTC
R6900
0
MIN_NECK_WIDTH=0.1000
MIN_LINE_WIDTH=0.2000
PPVIN_G3H_P3V3G3HRTC_R
C6900
2.2UF
C6902
2.2UF
C6907
68UF
POLY-TANT
CASE-D2E-SM-1
C6905
2.2UF
C6906
2.2UF
C6901
0.1UF
C6909
0.1UF
U6903
TPS62180
BGA
VIN1
VIN2
EN
SS/TR
SW1
SW2
VO
PG
FB
AGND
PGND
CHGR_EN_MVR
R6907
0
CHGR_EN_MVR_R
P3V3G3HRTC_SS
C6903
0.033UF
XW6900
SW
P3V3G3HRTC_PHASE1
DIDT=TRUE
P3V3G3HRTC_PHASE2
P3V3G3HRTC_PGOOD
P3V3G3HRTC_FB
GND_P3V3G3HRTC_AGND
MIN_LINE_WIDTH=0.2000
MIN_NECK_WIDTH=0.1000
PP3V3_G3H_RTC_REG_R
R6908
100K
L6900
1UH-20%-4.8A-0.032OHM
L6901
1UH-20%-4.8A-0.032OHM
152S00386
VOUT = 3.304V
6A Max Output
f = 1.25 MHZ
C6912
150UF
C6914
10UF
C6915
10UF
C6916
150UF
C6917
150UF
C6918
10UF
C6919
10UF
VOUT = 0.8 * (1 + <RA>/<RB>) = 3.304V
R6912
10
P3V3G3HRTC_FB_R
R6913
0.00
<Ra>
C6910
220PF
P3V3G3HRTC_RA_R
R6910
360K
<Rb>
R6911
115K
R6934
0
R6935
0
BOM_COST_GROUP=PLATFORM POWER
PAGE TITLE
BATTERY CONN, 3V3 G3H RTC VR
Apple Inc.
DRAWING NUMBER
051-05309
SIZE
D
REVISION
6.0.0
BRANCH
pvt
PAGE
69 OF 500
SHEET
63 OF 98
NOTICE OF PROPRIETARY PROPERTY:
THE INFORMATION CONTAINED HEREIN IS THE
PROPRIETARY PROPERTY OF APPLE INC.
THE POSESSOR AGREES TO THE FOLLOWING:
I TO MAINTAIN THIS DOCUMENT IN CONFIDENCE
II NOT TO REPRODUCE OR COPY IT
III NOT TO REVEAL OR PUBLISH IT IN WHOLE OR PART
IV ALL RIGHTS RESERVED

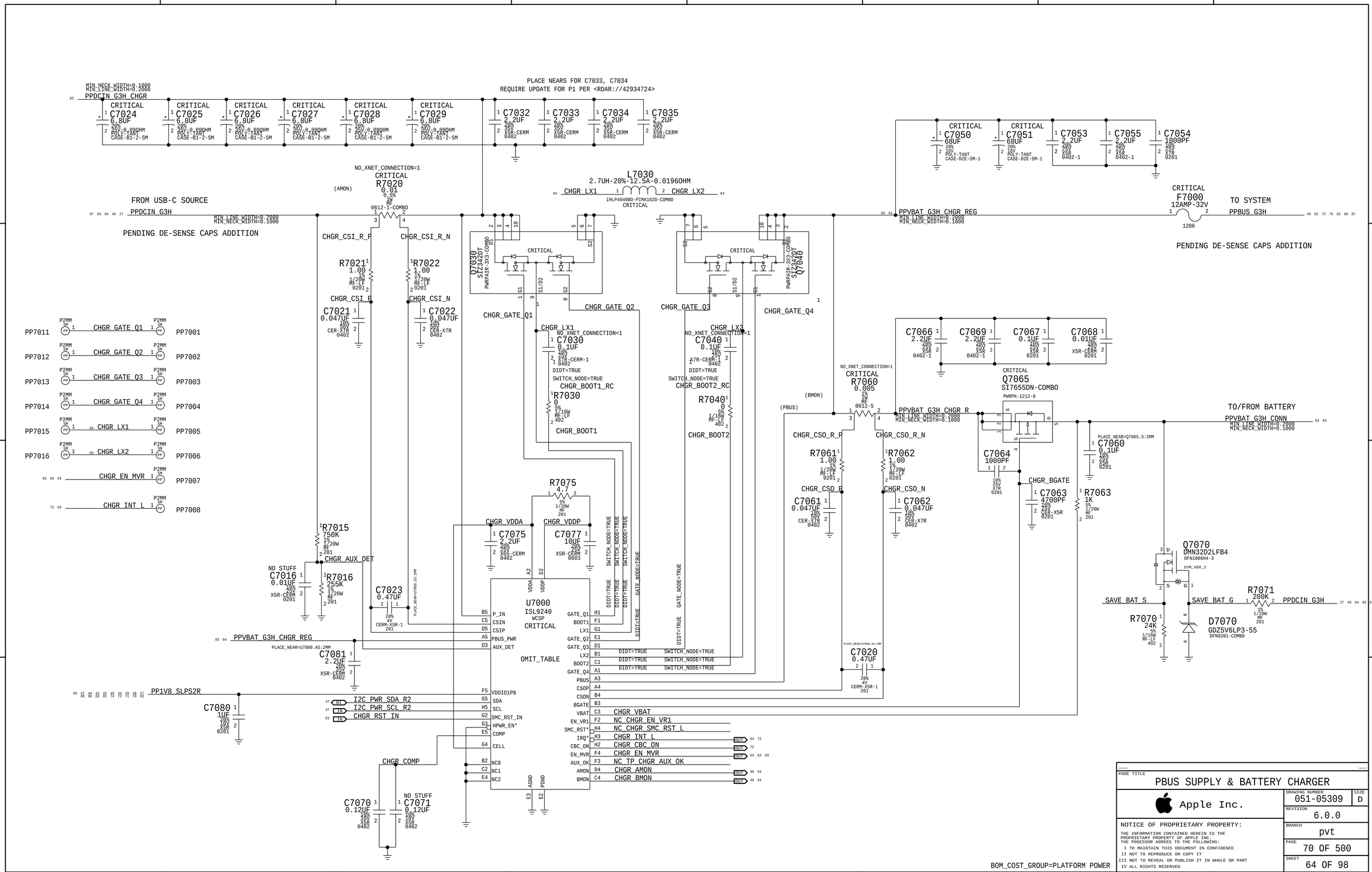
PPDCIN_G3H_CHGR
MIN_NECK_WIDTH=0.1000
MIN_LINE_WIDTH=0.2000
PLACE NEARS FOR C7033, C7034
REQUIRE UPDATE FOR P1 PER <RDAR://42934724>
C7024 6.8UF
C7025 6.8UF
C7026 6.8UF
C7027 6.8UF
C7028 6.8UF
C7029 6.8UF
C7032 2.2UF
C7033 2.2UF
C7034 2.2UF
C7035 2.2UF
C7050 68UF
C7051 68UF
C7053 2.2UF
C7055 2.2UF
C7054 1000PF
FROM USB-C SOURCE
PPDCIN_G3H
PENDING DE-SENSE CAPS ADDITION
R7020 0.01
L7030 2.7UH-20%-12.5A-0.0196OHM
CHGR_LX1
CHGR_LX2
PPVBAT_G3H_CHGR_REG
F7000 12AMP-32V
TO SYSTEM
PPBUS_G3H
PENDING DE-SENSE CAPS ADDITION
CHGR_CSI_P
CHGR_CSI_N
R7021 1.00
R7022 1.00
C7021 0.047UF
C7022 0.047UF
Q7030 SI7342DT
Q7040 SI7342DT
CHGR_GATE_Q1
CHGR_GATE_Q2
CHGR_GATE_Q3
CHGR_GATE_Q4
C7030 0.1UF
C7040 0.1UF
R7030 0
R7040 0
CHGR_BOOT1_RC
CHGR_BOOT2_RC
CHGR_BOOT1
CHGR_BOOT2
C7066 2.2UF
C7069 2.2UF
C7067 0.1UF
C7068 0.01UF
R7060 0.005
Q7065 SI7655DN-COMBO
PPVBAT_G3H_CHGR_R
TO/FROM BATTERY
PPVBAT_G3H_CONN
C7060 0.1UF
C7064 1000PF
CHGR_BGATE
C7063 4700PF
R7063 1K
R7061 1.00
R7062 1.00
C7061 0.047UF
C7062 0.047UF
CHGR_CSO_R_P
CHGR_CSO_R_N
CHGR_CSO_P
CHGR_CSO_N
C7020 0.47UF
Q7070 DMN32D2LFB4
SAVE_BAT_S
SAVE_BAT_G
R7071 200K
PPDCIN_G3H
R7070 24K
D7070 GDZ5V6LP3-55
PP7011 CHGR_GATE_Q1 PP7001
PP7012 CHGR_GATE_Q2 PP7002
PP7013 CHGR_GATE_Q3 PP7003
PP7014 CHGR_GATE_Q4 PP7004
PP7015 CHGR_LX1 PP7005
PP7016 CHGR_LX2 PP7006
CHGR_EN_MVR PP7007
CHGR_INT_L PP7008
R7015 750K
CHGR_AUX_DET
C7016 0.01UF
R7016 255K
C7023 0.47UF
R7075 4.7
CHGR_VDDA
CHGR_VDDP
C7075 2.2UF
C7077 10UF
U7000 ISL9240 WCSP
OMIT_TABLE
PPVBAT_G3H_CHGR_REG
C7081 2.2UF
PP1V8_SLPS2R
C7080 1UF
I2C_PWR_SDA_R2
I2C_PWR_SCL_R2
CHGR_RST_IN
CHGR_COMP
C7070 0.12UF
C7071 0.12UF
CHGR_VBAT
NC_CHGR_EN_VR1
NC_CHGR_SMC_RST_L
CHGR_INT_L
CHGR_CBC_ON
CHGR_EN_MVR
NC_TP_CHGR_AUX_OK
CHGR_AMON
CHGR_BMON
BOM_COST_GROUP=PLATFORM POWER
PAGE TITLE
PBUS SUPPLY & BATTERY CHARGER
Apple Inc.
NOTICE OF PROPRIETARY PROPERTY:
THE INFORMATION CONTAINED HEREIN IS THE PROPRIETARY PROPERTY OF APPLE INC.
THE POSESSOR AGREES TO THE FOLLOWING:
I TO MAINTAIN THIS DOCUMENT IN CONFIDENCE
II NOT TO REPRODUCE OR COPY IT
III NOT TO REVEAL OR PUBLISH IT IN WHOLE OR PART
IV ALL RIGHTS RESERVED
DRAWING NUMBER 051-05309
SIZE D
REVISION 6.0.0
BRANCH pvt
PAGE 70 OF 500
SHEET 64 OF 98

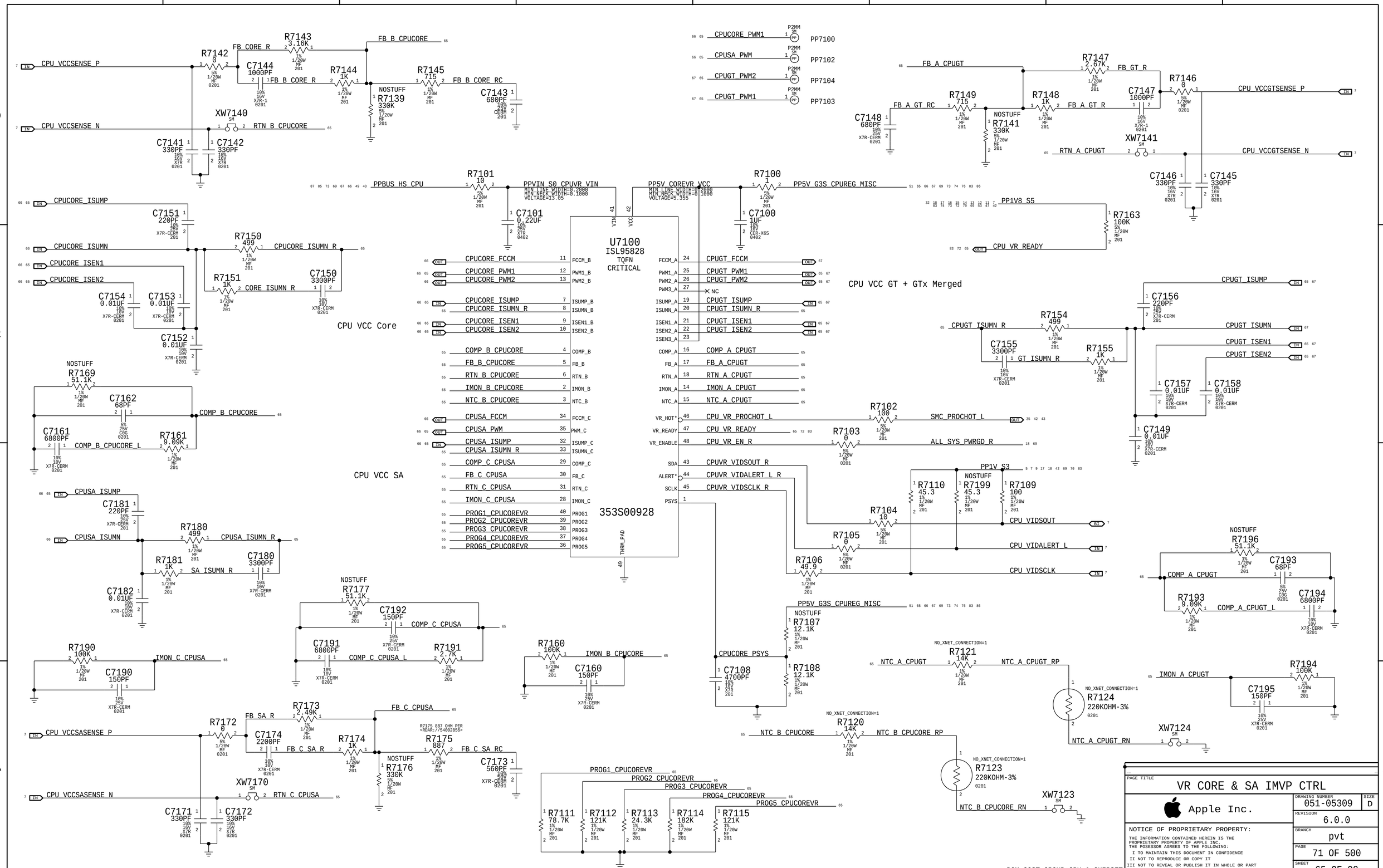
CPU VCCSENSE P
CPU VCCSENSE N
R7142 0
C7144 1000PF
R7143 3.16K
FB CORE R
FB B CPUCORE
FB B CORE R
R7144 1K
R7145 715
FB B CORE RC
NOSTUFF
R7139 330K
C7143 680PF
XW7140
RTN B CPUCORE
C7141 330PF
C7142 330PF
CPUCORE PWM1
CPUSA PWM
CPUGT PWM2
CPUGT PWM1
PP7100
PP7102
PP7104
PP7103
FB A CPUGT
R7147 2.67K
FB GT R
R7146 0
CPU VCCGTSENSE P
R7149 715
R7148 1K
C7147 1000PF
FB A GT RC
FB A GT R
C7148 680PF
NOSTUFF
R7141 330K
XW7141
RTN A CPUGT
CPU VCCGTSENSE N
C7146 330PF
C7145 330PF
PPBUS HS CPU
R7101 10
PPVIN S0 CPUVR VIN
MIN_LINE_WIDTH=0.2000
MIN_NECK_WIDTH=0.1000
VOLTAGE=13.05
C7101 0.22UF
PP5V COREVR VCC
MIN_LINE_WIDTH=0.2000
MIN_NECK_WIDTH=0.1000
VOLTAGE=5.355
R7100 1
PP5V G3S CPUREG MISC
C7100 1UF
PP1V8 S5
R7163 100K
CPU VR READY
CPUCORE ISUMP
C7151 220PF
CPUCORE ISUMN
R7150 499
CPUCORE ISUMN R
CPUCORE ISEN1
CPUCORE ISEN2
C7154 0.01UF
C7153 0.01UF
R7151 1K
CORE ISUMN R
C7150 3300PF
C7152 0.01UF
CPU VCC Core
U7100
ISL95828
TQFN
CRITICAL
VIN 41
VCC 42
CPUCORE FCCM 11 FCCM_B
CPUCORE PWM1 12 PWM1_B
CPUCORE PWM2 13 PWM2_B
CPUCORE ISUMP 7 ISUMP_B
CPUCORE ISUMN R 8 ISUMN_B
CPUCORE ISEN1 9 ISEN1_B
CPUCORE ISEN2 10 ISEN2_B
COMP B CPUCORE 4 COMP_B
FB B CPUCORE 5 FB_B
RTN B CPUCORE 6 RTN_B
IMON B CPUCORE 2 IMON_B
NTC B CPUCORE 3 NTC_B
CPUSA FCCM 34 FCCM_C
CPUSA PWM 35 PWM_C
CPUSA ISUMP 32 ISUMP_C
CPUSA ISUMN R 33 ISUMN_C
COMP C CPUSA 29 COMP_C
FB C CPUSA 30 FB_C
RTN C CPUSA 31 RTN_C
IMON C CPUSA 28 IMON_C
PROG1 CPUCOREVR 40 PROG1
PROG2 CPUCOREVR 39 PROG2
PROG3 CPUCOREVR 38 PROG3
PROG4 CPUCOREVR 37 PROG4
PROG5 CPUCOREVR 36 PROG5
THRM PAD 49
353S00928
FCCM_A 24 CPUGT FCCM
PWM1_A 25 CPUGT PWM1
PWM2_A 26 CPUGT PWM2
PWM3_A 27 NC
ISUMP_A 19 CPUGT ISUMP
ISUMN_A 20 CPUGT ISUMN R
ISEN1_A 21 CPUGT ISEN1
ISEN2_A 22 CPUGT ISEN2
ISEN3_A 23
COMP_A 16 COMP A CPUGT
FB_A 17 FB A CPUGT
RTN_A 18 RTN A CPUGT
IMON_A 14 IMON A CPUGT
NTC_A 15 NTC A CPUGT
VR_HOT* 46 CPU VR PROCHOT L
VR_READY 47 CPU VR READY
VR_ENABLE 48 CPU VR EN R
SDA 43 CPUVR VIDSOUT R
ALERT* 44 CPUVR VIDALERT L R
SCLK 45 CPUVR VIDSCLK R
PSYS 1
CPU VCC GT + GTx Merged
CPUGT ISUMP
C7156 220PF
CPUGT ISUMN R
R7154 499
CPUGT ISUMN
C7155 3300PF
GT ISUMN R
R7155 1K
CPUGT ISEN1
CPUGT ISEN2
C7157 0.01UF
C7158 0.01UF
C7149 0.01UF
R7102 100
SMC PROCHOT L
R7103 0
ALL SYS PWRGD R
PP1V S3
R7110 45.3
NOSTUFF
R7199 45.3
R7109 100
R7104 10
CPU VIDSOUT
R7105 0
CPU VIDALERT L
R7106 49.9
CPU VIDSCLK
NOSTUFF
R7169 51.1K
C7162 68PF
COMP B CPUCORE
C7161 6800PF
COMP B CPUCORE L
R7161 9.99K
CPU VCC SA
CPUSA ISUMP
C7181 220PF
CPUSA ISUMN
R7180 499
CPUSA ISUMN R
R7181 1K
SA ISUMN R
C7180 3300PF
C7182 0.01UF
NOSTUFF
R7177 51.1K
C7192 150PF
COMP C CPUSA
C7191 6800PF
COMP C CPUSA L
R7191 2.7K
R7190 100K
IMON C CPUSA
C7190 150PF
R7160 100K
IMON B CPUCORE
C7160 150PF
PP5V G3S CPUREG MISC
NOSTUFF
R7107 12.1K
CPUCORE PSYS
C7108 4700PF
R7108 12.1K
NO_XNET_CONNECTION=1
R7121 14K
NTC A CPUGT
NTC A CPUGT RP
R7124 220KOHM-3%
NTC A CPUGT RN
NO_XNET_CONNECTION=1
R7120 14K
NTC B CPUCORE
NTC B CPUCORE RP
R7123 220KOHM-3%
NTC B CPUCORE RN
XW7123
NOSTUFF
R7196 51.1K
C7193 68PF
COMP A CPUGT
R7193 9.09K
COMP A CPUGT L
C7194 6800PF
R7194 100K
IMON A CPUGT
C7195 150PF
XW7124
R7172 0
FB SA R
R7173 2.49K
FB C CPUSA
CPU VCCSASENSE P
C7174 2200PF
FB C SA R
R7174 1K
R7175.887 OHM PER
R7175 887
FB C SA RC
NOSTUFF
R7176 330K
C7173 560PF
XW7170
CPU VCCSASENSE N
RTN C CPUSA
C7171 330PF
C7172 330PF
PROG1 CPUCOREVR
PROG2 CPUCOREVR
PROG3 CPUCOREVR
PROG4 CPUCOREVR
PROG5 CPUCOREVR
R7111 78.7K
R7112 121K
R7113 24.3K
R7114 182K
R7115 121K
BOM_COST_GROUP=CPU & CHIPSET
PAGE TITLE
VR CORE & SA IMVP CTRL
Apple Inc.
DRAWING NUMBER 051-05309
SIZE D
REVISION 6.0.0
BRANCH pvt
PAGE 71 OF 500
SHEET 65 OF 98
NOTICE OF PROPRIETARY PROPERTY:
THE INFORMATION CONTAINED HEREIN IS THE PROPRIETARY PROPERTY OF APPLE INC.
THE POSESSOR AGREES TO THE FOLLOWING:
I TO MAINTAIN THIS DOCUMENT IN CONFIDENCE
II NOT TO REPRODUCE OR COPY IT
III NOT TO REVEAL OR PUBLISH IT IN WHOLE OR PART
IV ALL RIGHTS RESERVED

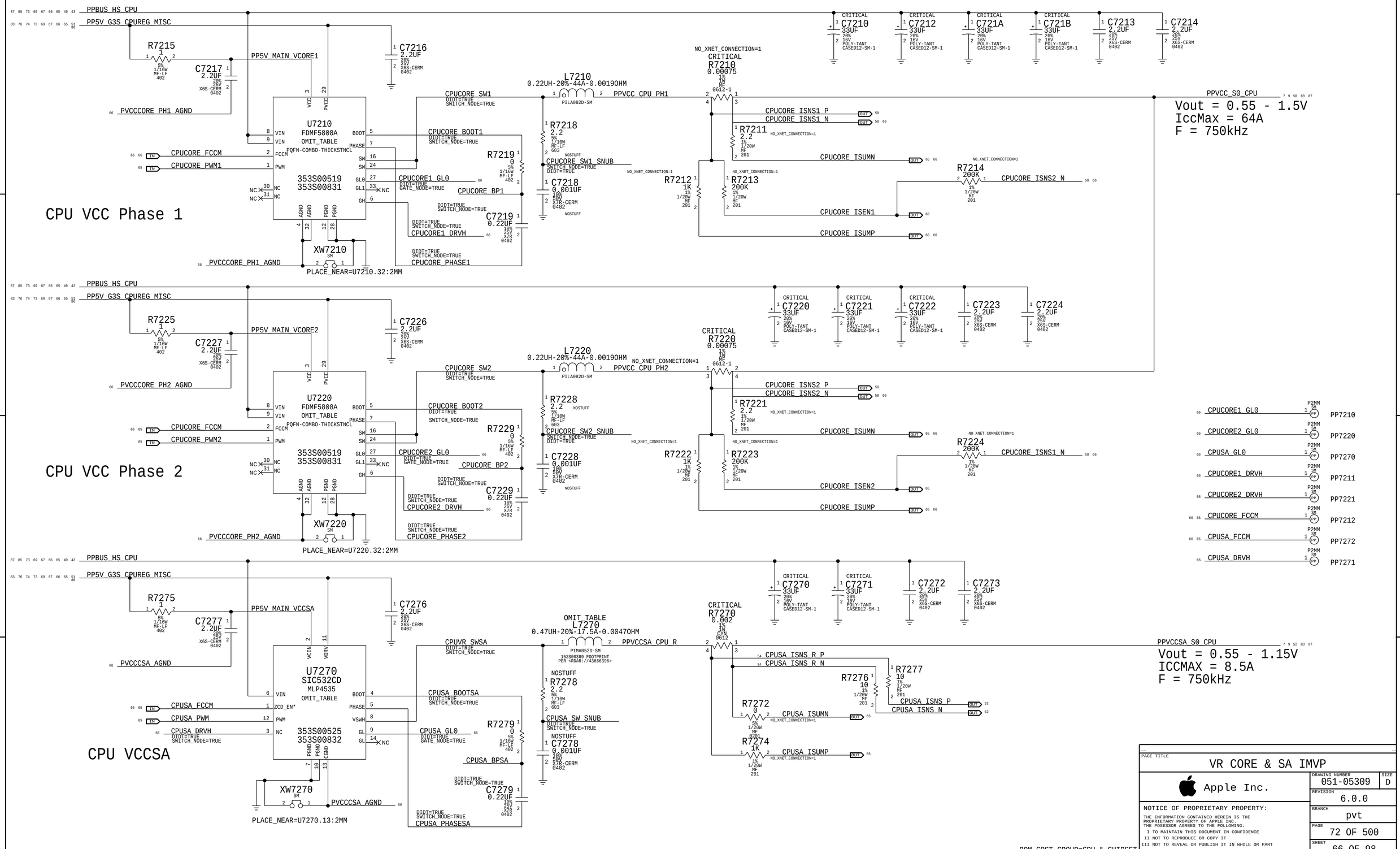

PAGE TITLE: VR CORE & SA IMVP

Apple Inc.

DRAWING NUMBER: 051-05309 | SIZE: D

REVISION: 6.0.0

BRANCH: pvt

PAGE: 72 OF 500

SHEET: 66 OF 98

NOTICE OF PROPRIETARY PROPERTY:
THE INFORMATION CONTAINED HEREIN IS THE PROPRIETARY PROPERTY OF APPLE INC.
THE POSESSOR AGREES TO THE FOLLOWING:
I TO MAINTAIN THIS DOCUMENT IN CONFIDENCE
II NOT TO REPRODUCE OR COPY IT
III NOT TO REVEAL OR PUBLISH IT IN WHOLE OR PART
IV ALL RIGHTS RESERVED

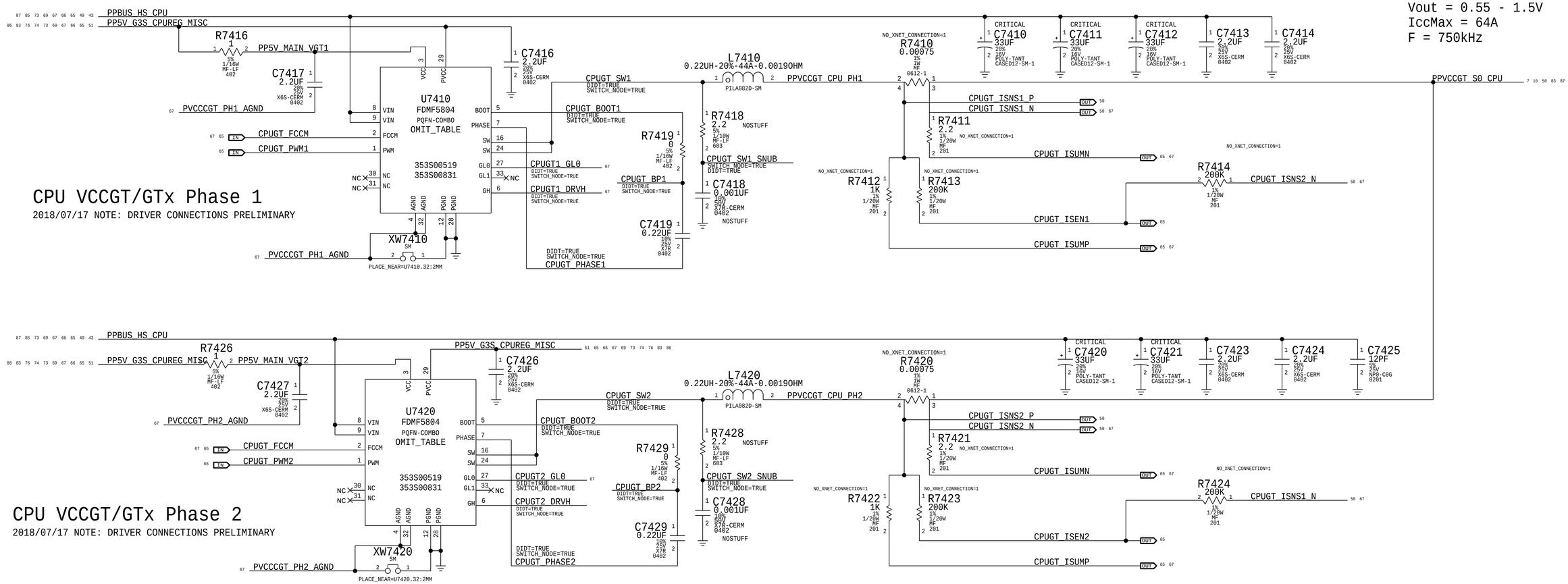

PAGE TITLE

VR GT & GTX IMVP

Apple Inc.

DRAWING NUMBER	051-05309
SIZE	D
REVISION	6.0.0
BRANCH	pvt
PAGE	74 OF 500
SHEET	67 OF 98

NOTICE OF PROPRIETARY PROPERTY:
THE INFORMATION CONTAINED HEREIN IS THE PROPRIETARY PROPERTY OF APPLE INC.
THE POSESSOR AGREES TO THE FOLLOWING:
I TO MAINTAIN THIS DOCUMENT IN CONFIDENCE
II NOT TO REPRODUCE OR COPY IT
III NOT TO REVEAL OR PUBLISH IT IN WHOLE OR PART
IV ALL RIGHTS RESERVED

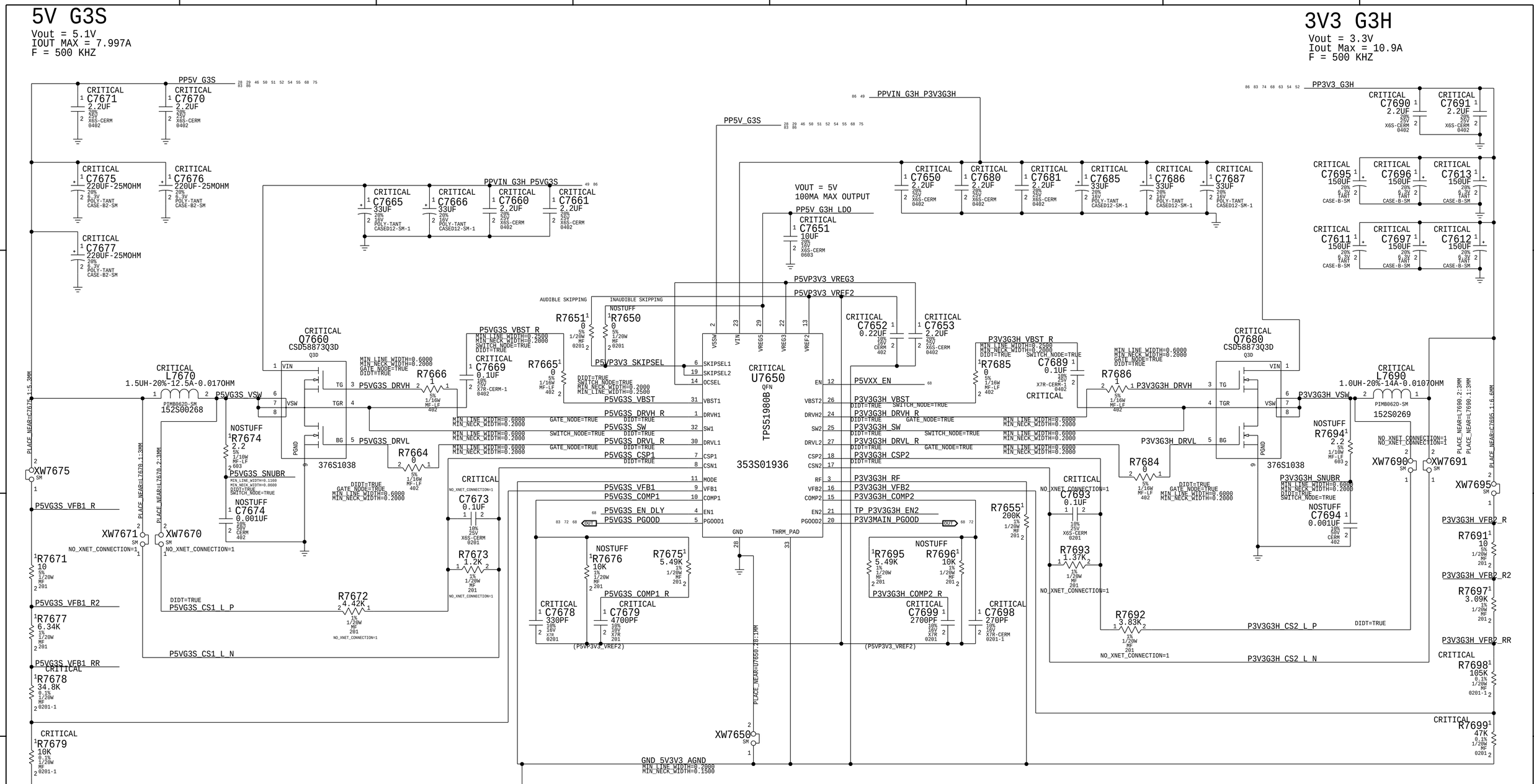

SYNC_MASTER= SYNC_DATE=

PAGE TITLE: VR 5V, 3V3

Apple Inc.

DRAWING NUMBER: 051-05309 SIZE: D

REVISION: 6.0.0

BRANCH: pvt

PAGE: 76 OF 500

SHEET: 68 OF 98

NOTICE OF PROPRIETARY PROPERTY:
THE INFORMATION CONTAINED HEREIN IS THE PROPRIETARY PROPERTY OF APPLE INC.
THE POSESSOR AGREES TO THE FOLLOWING:
I TO MAINTAIN THIS DOCUMENT IN CONFIDENCE
II NOT TO REPRODUCE OR COPY IT
III NOT TO REVEAL OR PUBLISH IT IN WHOLE OR PART
IV ALL RIGHTS RESERVED

1V EDRAM & EOPIO

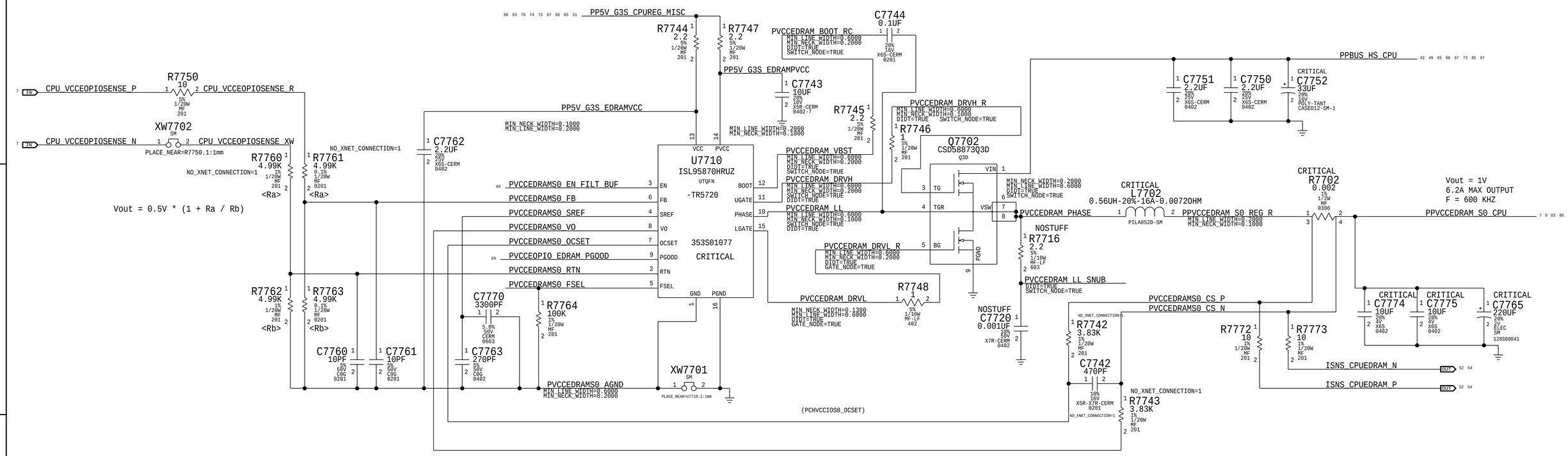

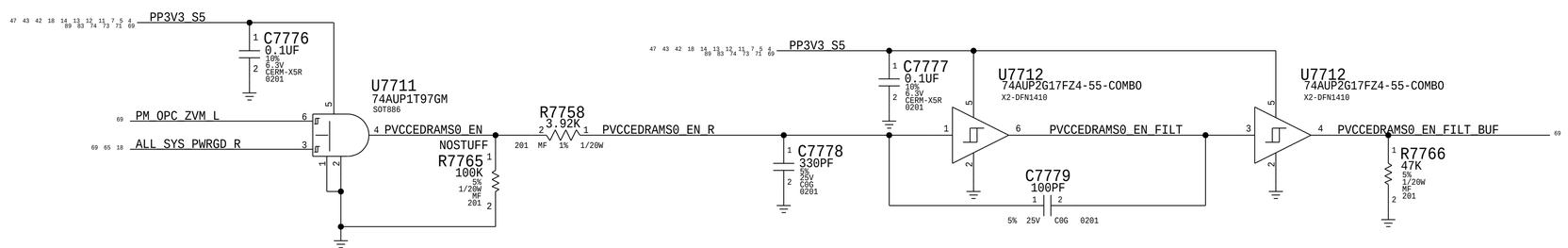

EDRAM EN BYPASS

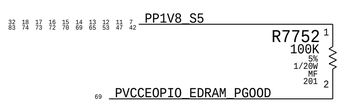

LEVEL SHIFT

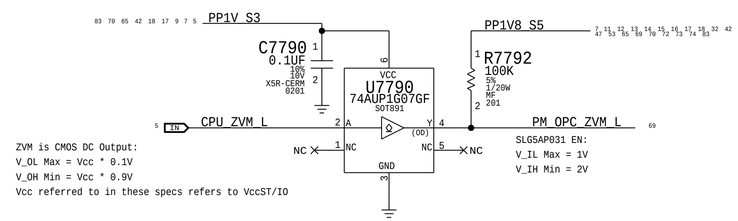

ZVM is CMOS DC Output:
V_OL Max = Vcc * 0.1V
V_OH Min = Vcc * 0.9V
Vcc referred to in these specs refers to VccST/IO

SLG5AP031 EN:
V_IL Max = 1V
V_IH Min = 2V

BOM_COST_GROUP=CPU & CHIPSET

PAGE TITLE	VR EOPIO EDRAM
Apple Inc.	DRAWING NUMBER 051-05309 / SIZE D
	REVISION 6.0.0
	BRANCH pvt
	PAGE 77 OF 500
	SHEET 69 OF 98

NOTICE OF PROPRIETARY PROPERTY:
THE INFORMATION CONTAINED HEREIN IS THE PROPRIETARY PROPERTY OF APPLE INC.
THE POSESSOR AGREES TO THE FOLLOWING:
I TO MAINTAIN THIS DOCUMENT IN CONFIDENCE
II NOT TO REPRODUCE OR COPY IT
III NOT TO REVEAL OR PUBLISH IT IN WHOLE OR PART
IV ALL RIGHTS RESERVED

Note : Design based on Calpe ERS - D2449-A0-110-00_0v3.pdf (Radar# 24696002)
System Block Diagram - T290 Power System Architecture .v9
Optimize components for individual projects based on EDP(A)
Buck 0, 2, 5, 7, 8, 9 and 10 have option for Remote Sense.

CRITICAL
OMIT_TABLE

U7800
D2449A0P0FUAVAE2
WLCSP
SYM 2 OF 4

BUCK INPUT

PP3V3 G3H PMU VDDMAIN

C7801 10UF 20% 6.3V CER-X6S 0402
C7802 10UF 20% 6.3V CER-X6S 0402
C7803 10UF 20% 6.3V CER-X6S 0402
C7804 10UF 20% 6.3V CER-X6S 0402
C7805 10UF 20% 6.3V CER-X6S 0402
C7806 10UF 20% 6.3V CER-X6S 0402
C7807 10UF 20% 6.3V CER-X6S 0402
C7808 10UF 20% 6.3V CER-X6S 0402
C7809 10UF 20% 6.3V CER-X6S 0402
C7810 10UF 20% 6.3V CER-X6S 0402
C7891 10UF 20% 6.3V CER-X6S 0402
C7895 10UF 20% 6.3V CER-X6S 0402
C78A3 10UF 20% 6.3V CER-X6S 0402
C78E2 10UF 20% 6.3V CER-X6S 0402

Resistor Divider from PBUS
PMU_VDD_HI
PP1V8_SLPS2R_PMUVDDGPIO
MIN_LINE_WIDTH=0.2000
MIN_NECK_WIDTH=0.1000
VOLTAGE=1.89
C7800 0.1UF 10% 6.3V X6S 0201

C7892 1UF 20% 6.3V X6S-CERM 0201
C7893 1UF 20% 6.3V X6S-CERM 0201
C7894 1UF 20% 6.3V X6S-CERM 0201
C78A0 1UF 20% 6.3V X6S-CERM 0201
C78A1 1UF 20% 6.3V X6S-CERM 0201
C78A2 1UF 20% 6.3V X6S-CERM 0201
C78CA 1UF 20% 6.3V X6S-CERM 0201
C78A4 1UF 20% 6.3V X6S-CERM 0201
C78A5 1UF 20% 6.3V X6S-CERM 0201
PLACE_SIDE=BOTTOM

C78A6 1UF 20% 6.3V X6S-CERM 0201
C78A7 1UF 20% 6.3V X6S-CERM 0201
C78A8 1UF 20% 6.3V X6S-CERM 0201
C78A9 1UF 20% 6.3V X6S-CERM 0201
C78B0 1UF 20% 6.3V X6S-CERM 0201
C78B1 1UF 20% 6.3V X6S-CERM 0201
C78E1 1UF 20% 6.3V X6S-CERM 0201
C78E3 1UF 20% 6.3V X6S-CERM 0201
C78E4 1UF 20% 6.3V X6S-CERM 0201
PLACE_SIDE=BOTTOM

C78C2 1UF 20% 6.3V X6S-CERM 0201
C78C3 1UF 20% 6.3V X6S-CERM 0201
C78C4 1UF 20% 6.3V X6S-CERM 0201
C78C5 1UF 20% 6.3V X6S-CERM 0201
C78C6 1UF 20% 6.3V X6S-CERM 0201
C78C7 1UF 20% 6.3V X6S-CERM 0201
C78C8 1UF 20% 6.3V X6S-CERM 0201
C78C9 1UF 20% 6.3V X6S-CERM 0201
C78CB 1UF 20% 6.3V X6S-CERM 0201
C78CC 1UF 20% 6.3V X6S-CERM 0201
PLACE_SIDE=BOTTOM PLACE_SIDE=BOTTOM PLACE_SIDE=BOTTOM PLACE_SIDE=BOTTOM PLACE_SIDE=BOTTOM

VOUT = 0.7-1 V
IOUT_MAX = 4 A
F = 3MHz
PPVPCORE S5

C7860 20UF 20% 2.5V X6S-CERM 0402
C7861 20UF 20% 2.5V X6S-CERM 0402
C7862 20UF 20% 2.5V X6S-CERM 0402
C7863 20UF 20% 2.5V X6S-CERM 0402
C7864 20UF 20% 2.5V X6S-CERM 0402
C7865 20UF 20% 2.5V X6S-CERM 0402
C7889 20UF 20% 2.5V X6S-CERM 0402
C7890 20UF 20% 2.5V X6S-CERM 0402
C7866 20UF 20% 2.5V X6S-CERM 0402
C7867 20UF 20% 2.5V X6S-CERM 0402
C7868 20UF 20% 2.5V X6S-CERM 0402
C7869 20UF 20% 2.5V X6S-CERM 0402
C7870 20UF 20% 2.5V X6S-CERM 0402
C7871 20UF 20% 2.5V X6S-CERM 0402

CRITICAL
L7819 0.47UH-20%-4.8A-0.0340HM 0806-COMBO
PVPCORES5_SW0
MIN_LINE_WIDTH=0.6000
MIN_NECK_WIDTH=0.1000
SWITCH_NODE=TRUE
DIDT=TRUE

CRITICAL
L7820 0.47UH-20%-4.8A-0.0340HM 0806-COMBO
PVPCORES5_SW1
MIN_LINE_WIDTH=0.6000
MIN_NECK_WIDTH=0.1000
SWITCH_NODE=TRUE
DIDT=TRUE
PLACE_NEAR=L7819.1:6MM
NOSTUFF
R7815 0 5% MF 1/20W
PVPCORES5_FB_P

PLACE_NEAR=U7800.G15:6MM
NOSTUFF
R7821 0 5% MF 1/20W
PVPCORES5_FB_N

VOUT = 1.05 V
IOUT_MAX = 6 A
F = 3MHz
PP1V PRIM

C78D0 20UF 20% 2.5V X6S-CERM 0402
C78D1 20UF 20% 2.5V X6S-CERM 0402
C78D2 20UF 20% 2.5V X6S-CERM 0402
C78D3 20UF 20% 2.5V X6S-CERM 0402
C78D4 20UF 20% 2.5V X6S-CERM 0402
C78D5 20UF 20% 2.5V X6S-CERM 0402
C7898 20UF 20% 2.5V X6S-CERM 0402
C7872 20UF 20% 2.5V X6S-CERM 0402
C7873 20UF 20% 2.5V X6S-CERM 0402
C7874 20UF 20% 2.5V X6S-CERM 0402
C7875 20UF 20% 2.5V X6S-CERM 0402
C7876 20UF 20% 2.5V X6S-CERM 0402
C7899 20UF 20% 2.5V X6S-CERM 0402
C7877 20UF 20% 2.5V X6S-CERM 0402
C7878 20UF 20% 2.5V X6S-CERM 0402
C7879 20UF 20% 2.5V X6S-CERM 0402
C7880 20UF 20% 2.5V X6S-CERM 0402
C7881 20UF 20% 2.5V X6S-CERM 0402

CRITICAL
L7821 0.47UH-20%-4.8A-0.0340HM 0806-COMBO
P1VPRIM_SW0
MIN_LINE_WIDTH=0.6000
MIN_NECK_WIDTH=0.1000
SWITCH_NODE=TRUE
DIDT=TRUE

CRITICAL
L7822 0.47UH-20%-4.8A-0.0340HM 0806-COMBO
P1VPRIM_SW1
MIN_LINE_WIDTH=0.6000
MIN_NECK_WIDTH=0.1000
SWITCH_NODE=TRUE
DIDT=TRUE
PLACE_NEAR=L7822.1:5MM
NOSTUFF
R7820 0 5% MF 1/20W
P1VPRIM_FB

VOUT = 0.9 V
IOUT_MAX = 3 A
F = 3MHz
PP0V9 SSD0

R7823 should be stuffed when Buck9 is unused

C7882 20UF 20% 2.5V X6S-CERM 0402 SSD:2L
C7883 20UF 20% 2.5V X6S-CERM 0402 SSD:2L
C7884 20UF 20% 2.5V X6S-CERM 0402 SSD:2L
C7885 20UF 20% 2.5V X6S-CERM 0402 SSD:2L
C7886 20UF 20% 2.5V X6S-CERM 0402 SSD:2L
C7887 20UF 20% 2.5V X6S-CERM 0402 SSD:2L

CRITICAL
L7823 0.47UH-20%-4.8A-0.0340HM 0806-COMBO
P0V9SSD_SW0
MIN_LINE_WIDTH=0.6000
MIN_NECK_WIDTH=0.1000
DIDT=TRUE
SWITCH_NODE=TRUE
PLACE_NEAR=L7823.1:10MM
R7822 0 5% MF 1/20W
P0V9SSD_FB_P
NO_TEST=1

PLACE_NEAR=U7800.N14:10MM
R7823 0 5% MF 1/20W
P0V9SSD_FB_N
NO_TEST=1

VOUT = 1.2/1.8 V
IOUT_MAX = 3 A
F = 3MHz
PPVCCQ_ANI SSD0

C78B2 20UF 20% 2.5V X6S-CERM 0402 SSD:2L
C78B3 20UF 20% 2.5V X6S-CERM 0402 SSD:2L
C78B4 20UF 20% 2.5V X6S-CERM 0402 SSD:2L
C78B5 20UF 20% 2.5V X6S-CERM 0402 SSD:2L
C78B6 20UF 20% 2.5V X6S-CERM 0402 SSD:2L
C78B7 20UF 20% 2.5V X6S-CERM 0402 SSD:2L
C78B8 20UF 20% 2.5V X6S-CERM 0402 SSD:2L
C78B9 20UF 20% 2.5V X6S-CERM 0402 SSD:2L
C78C0 20UF 20% 2.5V X6S-CERM 0402 SSD:2L
C78C1 20UF 20% 2.5V X6S-CERM 0402 SSD:2L

CRITICAL
L7824 0.47UH-20%-4.8A-0.0340HM 0806-COMBO
PVCCQSSD_SW0
MIN_LINE_WIDTH=0.6000
MIN_NECK_WIDTH=0.1000
DIDT=TRUE
SWITCH_NODE=TRUE
PLACE_NEAR=L7824.1:5MM
R7824 0 5% MF 1/20W
PVCCQSSD_FB

SWITCH OUTPUTS

BUCK3_SW1	T8	PP1V8_AWAKE	0.3A
BUCK3_SW2	R11	PP1V8_SLPS2R_PMUVDDGPIO	0.3A
BUCK3_SW3_0	U11	PP1V8_S5	1.0A
BUCK3_SW3_1	V11		
BUCK3_SW4_0	V8	PP1V8_S3	1.0A
BUCK3_SW4_1	U8		
BUCK3_SW5	R8	PP1V8_IO_SSD0_R	0.5A
BUCK4_SW1	P7	NC	0.5A
BUCK6_SW1	R6	NC	0.3A
BUCK8_SW1	P13	NC_PPBUCK8_SW1	0.3A
BUCK8_SW2	P12	PP1V_S3	0.3A

Supplied Current

BOM_COST_GROUP=PLATFORM POWER

Vout = 0.625V - 1.06V
Iout_Max = 13.4A
F = 2MHz & 4MHz
PPVDDCPU_AWAKE

PVDDCPUAWAKE_SW0 — CRITICAL 1UH-20%-3.8A-0.055OHM 2016-COMBO — L7806
PVDDCPUAWAKE_SW1 — CRITICAL 0.22UH-20%-6.7A-0.023OHM PINA20121T-SM — L7807
PVDDCPUAWAKE_SW2 — CRITICAL 0.22UH-20%-6.7A-0.023OHM PINA20121T-SM — L7808
PVDDCPUAWAKE_SW3 — CRITICAL 0.22UH-20%-6.7A-0.023OHM PINA20121T-SM — L7809
SWITCH_NODE=TRUE, MIN_NECK_WIDTH=0.2000, MIN_LINE_WIDTH=0.1750, DIDT=TRUE
PLACE_NEAR=L7806.2:5MM
PVDDCPUAWAKE_FB — R7806 0 5% MF 1/20W

C7811 20UF 20% 2.5V X6S-CERM 0402
C7812 20UF 20% 2.5V X6S-CERM 0402
C7813 20UF 20% 2.5V X6S-CERM 0402
C7821 20UF 20% 2.5V X6S-CERM 0402
C7822 20UF 20% 2.5V X6S-CERM 0402
C7823 20UF 20% 2.5V X6S-CERM 0402
C7824 20UF 20% 2.5V X6S-CERM 0402
C7825 20UF 20% 2.5V X6S-CERM 0402
C7826 20UF 20% 2.5V X6S-CERM 0402
C7827 20UF 20% 2.5V X6S-CERM 0402
C7828 20UF 20% 2.5V X6S-CERM 0402

Vout = 0.8V - 1.06V
Iout_Max = 1A
F = 3MHz
PPVDDCPUSRAM_AWAKE

PVDDCPUSRAMAWAKE_SW0 — CRITICAL 1.0UH-20%-2.6A-0.095OHM 0805-COMBO — L7810
SWITCH_NODE=TRUE, MIN_NECK_WIDTH=0.2000, MIN_LINE_WIDTH=0.1750, DIDT=TRUE
PLACE_NEAR=L7810.2:5MM
PVDDCPUSRAMAWAKE_FB — R7811 0 5% MF 1/20W

C7829 10UF 20% 4V X6S 0402-1
C7830 10UF 20% 4V X6S 0402-1

Vout = 0.82V
Iout_Max = 6A
F = 3MHz
PP0V82_SLPDDR

P0V8SLPDDR_SW0 — CRITICAL 1UH-20%-4.7A-0.040HM 2520 — L7811
P0V8SLPDDR_SW1 — CRITICAL 0.47UH-20%-4.8A-0.034OHM 0806-COMBO — L7812
SWITCH_NODE=TRUE, MIN_NECK_WIDTH=0.2000, MIN_LINE_WIDTH=0.1750, DIDT=TRUE
PLACE_NEAR=L7812.2:5MM
P0V8SLPDDR_FB — NOSTUFF R7812 0 5% MF 1/20W

C7833 20UF 20% 2.5V X6S-CERM 0402
C7834 20UF 20% 2.5V X6S-CERM 0402
C7835 20UF 20% 2.5V X6S-CERM 0402
C7836 20UF 20% 2.5V X6S-CERM 0402
C7837 20UF 20% 2.5V X6S-CERM 0402
C7838 20UF 20% 2.5V X6S-CERM 0402
C7814 20UF 20% 2.5V X6S-CERM 0402
C7815 20UF 20% 2.5V X6S-CERM 0402
C7831 20UF 20% 2.5V X6S-CERM 0402
C7832 20UF 20% 2.5V X6S-CERM 0402

Vout = 1.8V
Iout_Max = 2.5A
F = 3MHz
PP1V8_SLPS2R

P1V8SLPS2R_SW0 — CRITICAL 1UH-20%-3.8A-0.055OHM 2016-COMBO — L7813
SWITCH_NODE=TRUE, MIN_NECK_WIDTH=0.2000, MIN_LINE_WIDTH=0.1750, DIDT=TRUE
PLACE_NEAR=L7813.2:5MM
P1V8SLPS2R_FB — R7813 0 5% MF 1/20W
PP1V8_SLPS2R

C7839 20UF 20% 2.5V X6S-CERM 0402
C7840 20UF 20% 2.5V X6S-CERM 0402
C7841 20UF 20% 2.5V X6S-CERM 0402
C7842 20UF 20% 2.5V X6S-CERM 0402
C7843 20UF 20% 2.5V X6S-CERM 0402
C7844 20UF 20% 2.5V X6S-CERM 0402
C7845 20UF 20% 2.5V X6S-CERM 0402

Vout = 1.1V
Iout_Max = 4A
F = 3MHz
PP1V1_SLPS2R

P1V1SLPS2R_SW0 — CRITICAL 1UH-20%-3.8A-0.055OHM 2016-COMBO — L7814
P1V1SLPS2R_SW1 — CRITICAL 0.47UH-20%-4.8A-0.034OHM 0806-COMBO — L7815
SWITCH_NODE=TRUE, MIN_NECK_WIDTH=0.2000, MIN_LINE_WIDTH=0.1750, DIDT=TRUE
PLACE_NEAR=L7815.2:5MM
P1V1SLPS2R_FB — R7814 0 5% MF 1/20W

C7846 20UF 20% 2.5V X6S-CERM 0402
C7847 20UF 20% 2.5V X6S-CERM 0402
C7848 20UF 20% 2.5V X6S-CERM 0402
C7849 20UF 20% 2.5V X6S-CERM 0402
C7850 20UF 20% 2.5V X6S-CERM 0402
C7851 20UF 20% 2.5V X6S-CERM 0402
C7816 20UF 20% 2.5V X6S-CERM 0402
C7817 20UF 20% 2.5V X6S-CERM 0402

Vout = 0.9V
Iout_Max = 4A
F = 3MHz
PP0V9_SLPDDR

P0V9SLPDDR_SW0 — CRITICAL 1UH-20%-3.8A-0.055OHM 2016-COMBO — L7816
P0V9SLPDDR_SW1 — CRITICAL 0.47UH-20%-4.8A-0.034OHM 0806-COMBO — L7817
SWITCH_NODE=TRUE, MIN_NECK_WIDTH=0.2000, MIN_LINE_WIDTH=0.1750, DIDT=TRUE
PLACE_NEAR=L7816.2:5MM
P0V9SLPDDR_FB — NOSTUFF R7816 0 5% MF 1/20W

C7852 20UF 20% 2.5V X6S-CERM 0402
C7853 20UF 20% 2.5V X6S-CERM 0402
C7854 20UF 20% 2.5V X6S-CERM 0402
C7855 20UF 20% 2.5V X6S-CERM 0402
C7856 20UF 20% 2.5V X6S-CERM 0402
C7818 20UF 20% 2.5V X6S-CERM 0402
C7819 20UF 20% 2.5V X6S-CERM 0402

PAGE TITLE
PMIC BUCKS AND SWS

Apple Inc.

DRAWING NUMBER 051-05309 SIZE D
REVISION 6.0.0
BRANCH pvt
PAGE 78 OF 500
SHEET 70 OF 98

NOTICE OF PROPRIETARY PROPERTY:
THE INFORMATION CONTAINED HEREIN IS THE PROPRIETARY PROPERTY OF APPLE INC.
THE POSESSOR AGREES TO THE FOLLOWING:
I TO MAINTAIN THIS DOCUMENT IN CONFIDENCE
II NOT TO REPRODUCE OR COPY IT
III NOT TO REVEAL OR PUBLISH IT IN WHOLE OR PART
IV ALL RIGHTS RESERVED

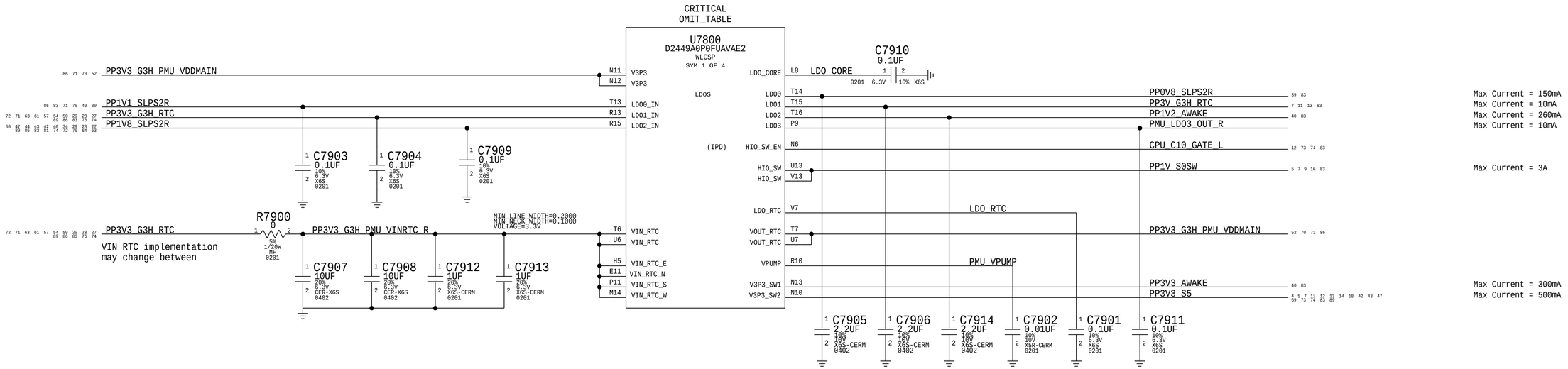

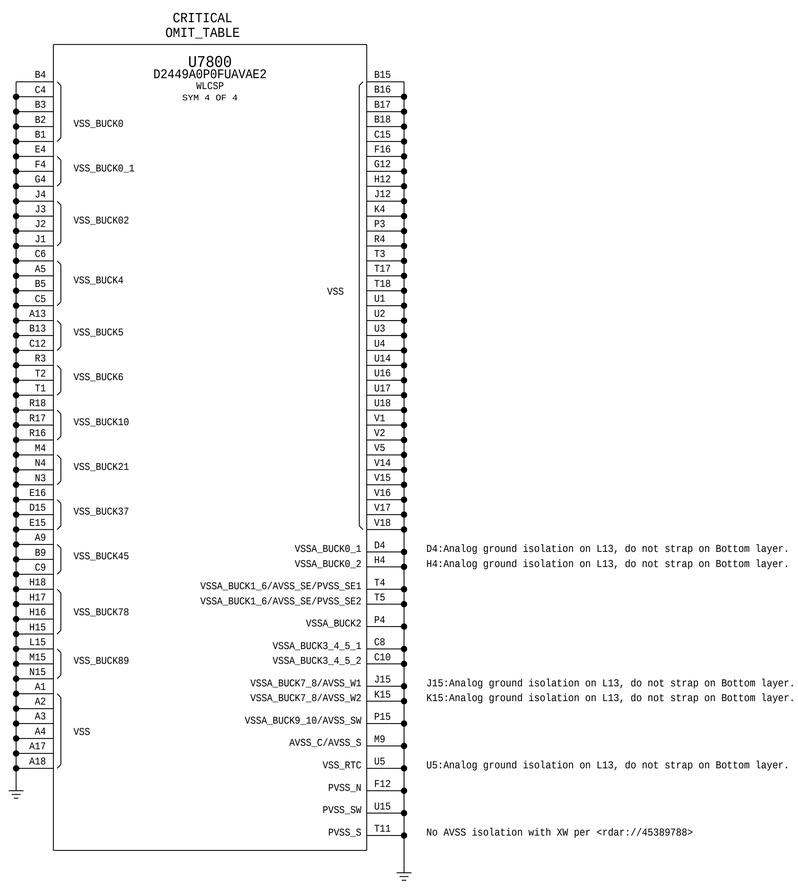

1.1V SLPDDR SWITCH

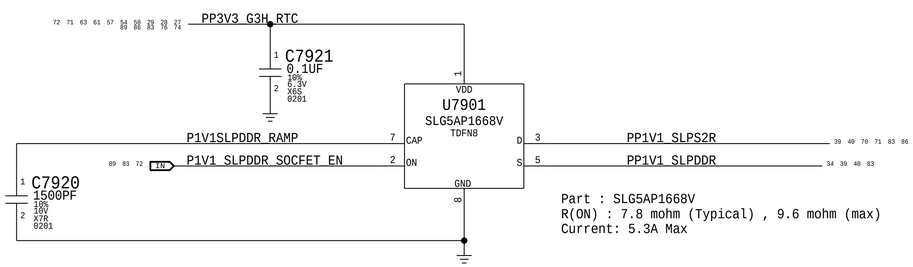

BOM_COST_GROUP=PLATFORM POWER

PAGE TITLE
PMIC LDOS

Apple Inc.

DRAWING NUMBER	051-05309
SIZE	D
REVISION	6.0.0
BRANCH	pvt
PAGE	79 OF 500
SHEET	71 OF 98

NOTICE OF PROPRIETARY PROPERTY:
THE INFORMATION CONTAINED HEREIN IS THE PROPRIETARY PROPERTY OF APPLE INC.
THE POSESSOR AGREES TO THE FOLLOWING:
I TO MAINTAIN THIS DOCUMENT IN CONFIDENCE
II NOT TO REPRODUCE OR COPY IT
III NOT TO REVEAL OR PUBLISH IT IN WHOLE OR PART
IV ALL RIGHTS RESERVED

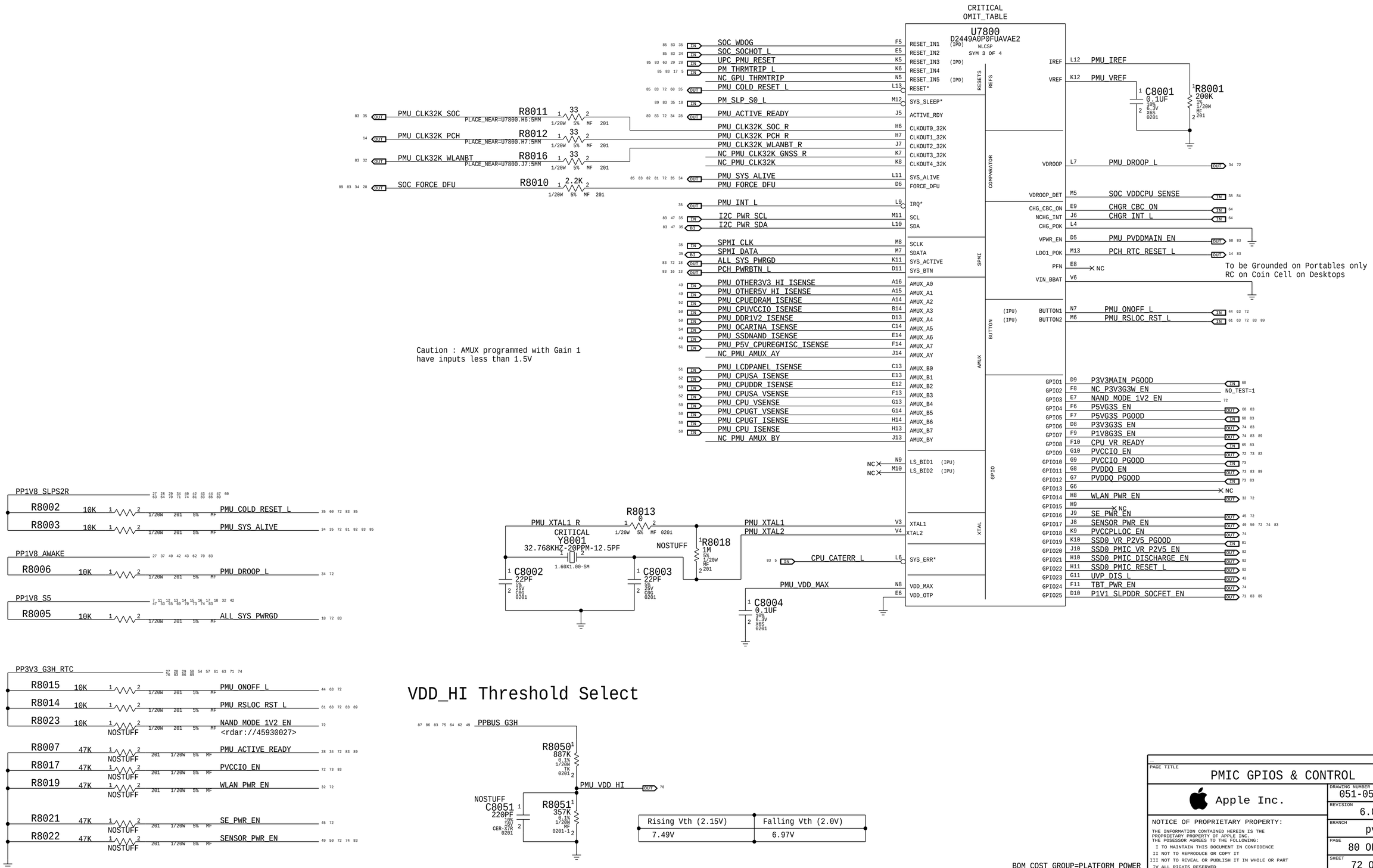
CRITICAL
OMIT_TABLE
U7800
D2449A0P0FUAVAE2
WLCSP
SYM 3 OF 4
RESET_IN1 F5 SOC_WDOG
RESET_IN2 E5 SOC_SOCHOT_L
RESET_IN3 K5 UPC_PMU_RESET
RESET_IN4 K6 PM_THRMTRIP_L
RESET_IN5 (IPD) N5 NC_GPU_THRMTRIP
RESET* L13 PMU_COLD_RESET_L
SYS_SLEEP* M12 PM_SLP_S0_L
ACTIVE_RDY J5 PMU_ACTIVE_READY
CLKOUT0_32K H6 PMU_CLK32K_SOC_R
CLKOUT1_32K H7 PMU_CLK32K_PCH_R
CLKOUT2_32K J7 PMU_CLK32K_WLANBT_R
CLKOUT3_32K K7 NC_PMU_CLK32K_GNSS_R
CLKOUT4_32K K8 NC_PMU_CLK32K
SYS_ALIVE L11 PMU_SYS_ALIVE
FORCE_DFU D6 PMU_FORCE_DFU
IRQ* L9 PMU_INT_L
SCL M11 I2C_PWR_SCL
SDA L10 I2C_PWR_SDA
SCLK M8 SPMI_CLK
SDATA M7 SPMI_DATA
SYS_ACTIVE K11 ALL_SYS_PWRGD
SYS_BTN D11 PCH_PWRBTN_L
AMUX_A0 A16 PMU_OTHER3V3_HI_ISENSE
AMUX_A1 A15 PMU_OTHER5V_HI_ISENSE
AMUX_A2 A14 PMU_CPUEDRAM_ISENSE
AMUX_A3 B14 PMU_CPUVCCIO_ISENSE
AMUX_A4 D13 PMU_DDR1V2_ISENSE
AMUX_A5 C14 PMU_OCARINA_ISENSE
AMUX_A6 E14 PMU_SSDNAND_ISENSE
AMUX_A7 F14 PMU_P5V_CPUREGMISC_ISENSE
AMUX_AY J14 NC_PMU_AMUX_AY
AMUX_B0 C13 PMU_LCDPANEL_ISENSE
AMUX_B1 E13 PMU_CPUSA_ISENSE
AMUX_B2 E12 PMU_CPUDDR_ISENSE
AMUX_B3 F13 PMU_CPUSA_VSENSE
AMUX_B4 G13 PMU_CPU_VSENSE
AMUX_B5 G14 PMU_CPUGT_VSENSE
AMUX_B6 H14 PMU_CPUGT_ISENSE
AMUX_B7 H13 PMU_CPU_ISENSE
AMUX_BY J13 NC_PMU_AMUX_BY
LS_BID1 (IPU) N9 NC
LS_BID2 (IPU) M10 NC
XTAL1 V3 PMU_XTAL1
XTAL2 V4 PMU_XTAL2
SYS_ERR* L6 CPU_CATERR_L
VDD_MAX N8 PMU_VDD_MAX
VDD_OTP E6
RESETS
REFS
COMPARATOR
SPMI
BUTTON
AMUX
GPIO
XTAL
IREF L12 PMU_IREF
VREF K12 PMU_VREF
VDROOP L7 PMU_DROOP_L
VDROOP_DET M5 SOC_VDDCPU_SENSE
CHG_CBC_ON E9 CHGR_CBC_ON
NCHG_INT J6 CHGR_INT_L
CHG_POK L4
VPWR_EN D5 PMU_PVDDMAIN_EN
LDO1_POK M13 PCH_RTC_RESET_L
PFN E8 NC
VIN_BBAT V6
(IPU) BUTTON1 N7 PMU_ONOFF_L
(IPU) BUTTON2 M6 PMU_RSLOC_RST_L
GPIO1 D9 P3V3MAIN_PGOOD
GPIO2 F8 NC_P3V3G3W_EN
GPIO3 E7 NAND_MODE_1V2_EN
GPIO4 F6 P5VG3S_EN
GPIO5 F7 P5VG3S_PGOOD
GPIO6 D8 P3V3G3S_EN
GPIO7 F9 P1V8G3S_EN
GPIO8 F10 CPU_VR_READY
GPIO9 G10 PVCCIO_EN
GPIO10 G9 PVCCIO_PGOOD
GPIO11 G8 PVDDQ_EN
GPIO12 G7 PVDDQ_PGOOD
GPIO13 G6 NC
GPIO14 H8 WLAN_PWR_EN
GPIO15 H9 NC
GPIO16 J9 SE_PWR_EN
GPIO17 J8 SENSOR_PWR_EN
GPIO18 K9 PVCCPLLOC_EN
GPIO19 K10 SSD0_VR_P2V5_PGOOD
GPIO20 J10 SSD0_PMIC_VR_P2V5_EN
GPIO21 H10 SSD0_PMIC_DISCHARGE_EN
GPIO22 H11 SSD0_PMIC_RESET_L
GPIO23 G11 UVP_DIS_L
GPIO24 F11 TBT_PWR_EN
GPIO25 D10 P1V1_SLPDDR_SOCFET_EN
C8001 0.1UF 10% 6.3V X6S 0201
R8001 200K 1% 1/20W MF 201
To be Grounded on Portables only
RC on Coin Cell on Desktops
PMU_CLK32K_SOC R8011 33 PLACE_NEAR=U7800.H6:5MM
PMU_CLK32K_PCH R8012 33 PLACE_NEAR=U7800.H7:5MM
PMU_CLK32K_WLANBT R8016 33 PLACE_NEAR=U7800.J7:5MM
SOC_FORCE_DFU R8010 2.2K
1/20W 5% MF 201
Caution : AMUX programmed with Gain 1
have inputs less than 1.5V
PMU_XTAL1_R R8013 0 1/20W 5% MF 0201
CRITICAL
Y8001
32.768KHZ-20PPM-12.5PF
1.60X1.00-SM
NOSTUFF
R8018 1M 5% 1/20W MF 201
C8002 22PF 5% 25V C0G 0201
C8003 22PF 5% 25V C0G 0201
C8004 0.1UF 10% 6.3V X6S 0201
PP1V8_SLPS2R
R8002 10K PMU_COLD_RESET_L
R8003 10K PMU_SYS_ALIVE
PP1V8_AWAKE
R8006 10K PMU_DROOP_L
PP1V8_S5
R8005 10K ALL_SYS_PWRGD
PP3V3_G3H_RTC
R8015 10K PMU_ONOFF_L
R8014 10K PMU_RSLOC_RST_L
R8023 10K NOSTUFF NAND_MODE_1V2_EN
<rdar://45930027>
R8007 47K NOSTUFF PMU_ACTIVE_READY
R8017 47K NOSTUFF PVCCIO_EN
R8019 47K NOSTUFF WLAN_PWR_EN
R8021 47K NOSTUFF SE_PWR_EN
R8022 47K NOSTUFF SENSOR_PWR_EN
1/20W 201 5% MF
VDD_HI Threshold Select
PPBUS_G3H
R8050 887K 0.1% 1/20W TK 0201
PMU_VDD_HI
NOSTUFF
C8051 220PF 10% 16V CER-X7R 0201
R8051 357K 0.1% 1/20W MF 0201-1
Rising Vth (2.15V) 7.49V
Falling Vth (2.0V) 6.97V
BOM_COST_GROUP=PLATFORM POWER
PAGE TITLE
PMIC GPIOS & CONTROL
Apple Inc.
DRAWING NUMBER 051-05309
SIZE D
REVISION 6.0.0
BRANCH pvt
PAGE 80 OF 500
SHEET 72 OF 98
NOTICE OF PROPRIETARY PROPERTY:
THE INFORMATION CONTAINED HEREIN IS THE PROPRIETARY PROPERTY OF APPLE INC.
THE POSESSOR AGREES TO THE FOLLOWING:
I TO MAINTAIN THIS DOCUMENT IN CONFIDENCE
II NOT TO REPRODUCE OR COPY IT
III NOT TO REVEAL OR PUBLISH IT IN WHOLE OR PART
IV ALL RIGHTS RESERVED

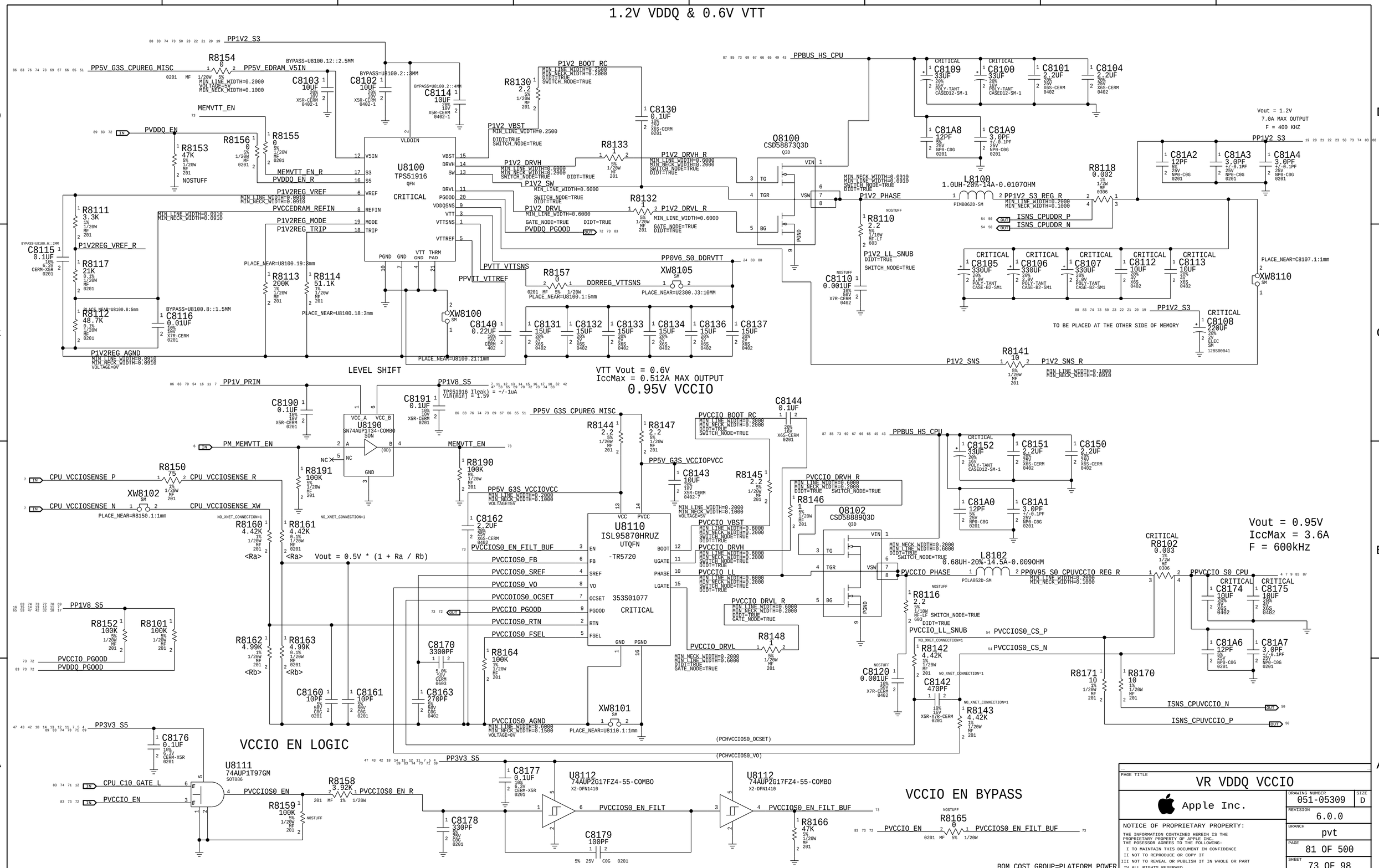

PAGE TITLE

VR VDDQ VCCIO

Apple Inc.

DRAWING NUMBER 051-05309 | SIZE D

REVISION 6.0.0

BRANCH pvt

PAGE 81 OF 500

SHEET 73 OF 98

NOTICE OF PROPRIETARY PROPERTY:
THE INFORMATION CONTAINED HEREIN IS THE PROPRIETARY PROPERTY OF APPLE INC.
THE POSESSOR AGREES TO THE FOLLOWING:
I TO MAINTAIN THIS DOCUMENT IN CONFIDENCE
II NOT TO REPRODUCE OR COPY IT
III NOT TO REVEAL OR PUBLISH IT IN WHOLE OR PART
IV ALL RIGHTS RESERVED

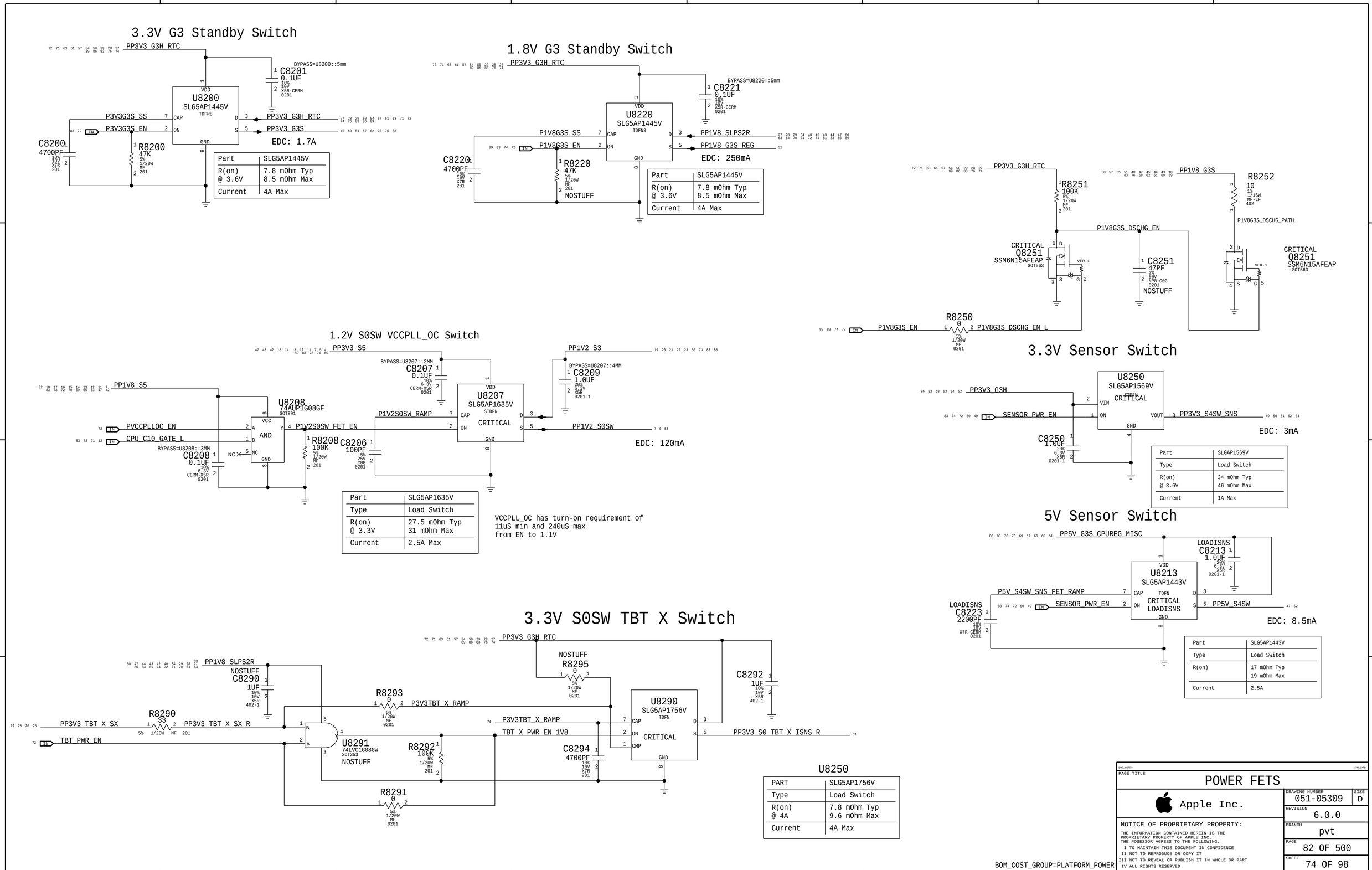
3.3V G3 Standby Switch
PP3V3_G3H_RTC
BYPASS=U8200::5mm
C8201 0.1UF 10% 10V X5R-CERM 0201
U8200 SLG5AP1445V TDFN8
VDD CAP ON GND D S
P3V3G3S_SS
P3V3G3S_EN
PP3V3_G3H_RTC
PP3V3_G3S
EDC: 1.7A
C8200 4700PF 10% 10V X7R 201
R8200 47K 5% 1/20W MF 201
Part | SLG5AP1445V
R(on) @ 3.6V | 7.8 mOhm Typ 8.5 mOhm Max
Current | 4A Max
1.8V G3 Standby Switch
PP3V3_G3H_RTC
BYPASS=U8220::5mm
C8221 0.1UF 10% 10V X5R-CERM 0201
U8220 SLG5AP1445V TDFN8
P1V8G3S_SS
P1V8G3S_EN
PP1V8_SLPS2R
PP1V8_G3S_REG
EDC: 250mA
C8220 4700PF 10% 10V X7R 201
R8220 47K 5% 1/20W MF 201 NOSTUFF
Part | SLG5AP1445V
R(on) @ 3.6V | 7.8 mOhm Typ 8.5 mOhm Max
Current | 4A Max
PP3V3_G3H_RTC
R8251 100K 5% 1/20W MF 201
PP1V8_G3S
R8252 10 1% 1/16W MF-LF 402
P1V8G3S_DSCHG_PATH
P1V8G3S_DSCHG_EN
CRITICAL Q8251 SSM6N15AFEAP SOT563
C8251 47PF 2% 50V NP0-C0G 0201 NOSTUFF
CRITICAL Q8251 SSM6N15AFEAP SOT563
R8250 0 5% 1/20W MF 0201
P1V8G3S_EN
P1V8G3S_DSCHG_EN_L
1.2V S0SW VCCPLL_OC Switch
PP3V3_S5
BYPASS=U8207::2MM
C8207 0.1UF 10% 6.3V CERM-X5R 0201
PP1V2_S3
BYPASS=U8207::4MM
C8209 1.0UF 20% 6.3V X5R 0201-1
PP1V8_S5
U8208 74AUP1G08GF SOT891
VCC AND GND
PVCCPLLOC_EN
CPU_C10_GATE_L
BYPASS=U8208::3MM
C8208 0.1UF 10% 6.3V CERM-X5R 0201
NC
R8208 100K 5% 1/20W MF 201
P1V2S0SW_FET_EN
P1V2S0SW_RAMP
C8206 100PF 5% 25V C0G 0201
U8207 SLG5AP1635V STDFN CRITICAL
VDD CAP ON GND D S
PP1V2_S0SW
EDC: 120mA
Part | SLG5AP1635V
Type | Load Switch
R(on) @ 3.3V | 27.5 mOhm Typ 31 mOhm Max
Current | 2.5A Max
VCCPLL_OC has turn-on requirement of
11uS min and 240uS max
from EN to 1.1V
3.3V Sensor Switch
PP3V3_G3H
U8250 SLG5AP1569V STDFN CRITICAL
VIN ON GND VOUT
SENSOR_PWR_EN
PP3V3_S4SW_SNS
EDC: 3mA
C8250 1.0UF 20% 6.3V X5R 0201-1
Part | SLGAP1569V
Type | Load Switch
R(on) @ 3.6V | 34 mOhm Typ 46 mOhm Max
Current | 1A Max
5V Sensor Switch
PP5V_G3S_CPUREG_MISC
LOADISNS C8213 1.0UF 20% 6.3V X5R 0201-1
U8213 SLG5AP1443V TDFN CRITICAL LOADISNS
VDD CAP ON GND D S
P5V_S4SW_SNS_FET_RAMP
SENSOR_PWR_EN
PP5V_S4SW
LOADISNS C8223 2200PF 10% 10V X7R-CERM 0201
EDC: 8.5mA
Part | SLG5AP1443V
Type | Load Switch
R(on) | 17 mOhm Typ 19 mOhm Max
Current | 2.5A
3.3V S0SW TBT X Switch
PP3V3_G3H_RTC
NOSTUFF R8295 0 5% 1/20W MF 0201
PP1V8_SLPS2R
NOSTUFF C8290 1UF 10% 10V X5R 402-1
R8293 0 5% 1/20W MF 0201
P3V3TBT_X_RAMP
C8292 1UF 10% 10V X5R 402-1
R8290 33 5% 1/20W MF 201
PP3V3_TBT_X_SX
PP3V3_TBT_X_SX_R
TBT_PWR_EN
U8290 SLG5AP1756V TDFN CRITICAL
CAP ON CMP D S GND
TBT_X_PWR_EN_1V8
PP3V3_S0_TBT_X_ISNS_R
U8291 74LVC1G08GW SOT353 NOSTUFF
R8292 100K 5% 1/20W MF 201
C8294 4700PF 10% 10V X7R 201
R8291 0 5% 1/20W MF 0201
U8250
PART | SLG5AP1756V
Type | Load Switch
R(on) @ 4A | 7.8 mOhm Typ 9.6 mOhm Max
Current | 4A Max
BOM_COST_GROUP=PLATFORM_POWER
PAGE TITLE
POWER FETS
Apple Inc.
NOTICE OF PROPRIETARY PROPERTY:
THE INFORMATION CONTAINED HEREIN IS THE PROPRIETARY PROPERTY OF APPLE INC.
THE POSESSOR AGREES TO THE FOLLOWING:
I TO MAINTAIN THIS DOCUMENT IN CONFIDENCE
II NOT TO REPRODUCE OR COPY IT
III NOT TO REVEAL OR PUBLISH IT IN WHOLE OR PART
IV ALL RIGHTS RESERVED
DRAWING NUMBER 051-05309
SIZE D
REVISION 6.0.0
BRANCH pvt
PAGE 82 OF 500
SHEET 74 OF 98

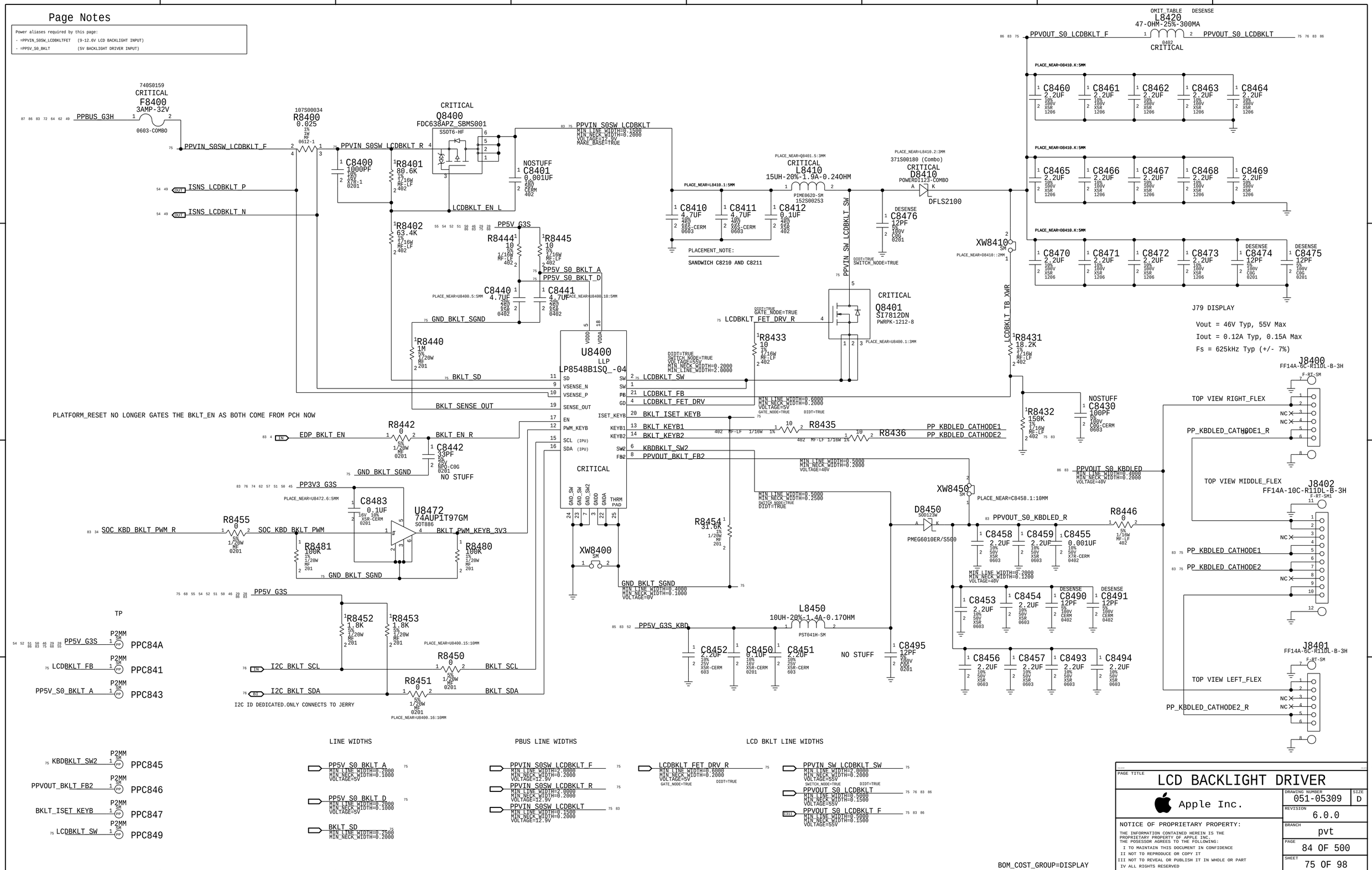
Page Notes
Power aliases required by this page:
- =PPVIN_S0SW_LCDBKLTFET (9-12.6V LCD BACKLIGHT INPUT)
- =PP5V_S0_BKLT (5V BACKLIGHT DRIVER INPUT)
F8400 3AMP-32V 0603-COMBO
R8400 0.025
Q8400 FDC638APZ_SBMS001
L8420 47-OHM-25%-300MA
L8410 15UH-20%-1.9A-0.24OHM
D8410 POWERD123-COMBO DFLS2100
Q8401 SI7812DN PWRPK-1212-8
U8400 LP8548B1SQ_-04
U8472 74AUP1T97GM
D8450 PMEG6010ER/S500
L8450 10UH-20%-1.4A-0.17OHM
J79 DISPLAY
Vout = 46V Typ, 55V Max
Iout = 0.12A Typ, 0.15A Max
Fs = 625kHz Typ (+/- 7%)
J8400 FF14A-6C-R11DL-B-3H
J8402 FF14A-10C-R11DL-B-3H
J8401 FF14A-6C-R11DL-B-3H
TOP VIEW RIGHT_FLEX
TOP VIEW MIDDLE_FLEX
TOP VIEW LEFT_FLEX
PLATFORM_RESET NO LONGER GATES THE BKLT_EN AS BOTH COME FROM PCH NOW
I2C ID DEDICATED.ONLY CONNECTS TO JERRY
LINE WIDTHS
PBUS LINE WIDTHS
LCD BKLT LINE WIDTHS
BOM_COST_GROUP=DISPLAY
PAGE TITLE
LCD BACKLIGHT DRIVER
Apple Inc.
DRAWING NUMBER 051-05309
SIZE D
REVISION 6.0.0
BRANCH pvt
PAGE 84 OF 500
SHEET 75 OF 98
NOTICE OF PROPRIETARY PROPERTY:
THE INFORMATION CONTAINED HEREIN IS THE PROPRIETARY PROPERTY OF APPLE INC.
THE POSESSOR AGREES TO THE FOLLOWING:
I TO MAINTAIN THIS DOCUMENT IN CONFIDENCE
II NOT TO REPRODUCE OR COPY IT
III NOT TO REVEAL OR PUBLISH IT IN WHOLE OR PART
IV ALL RIGHTS RESERVED

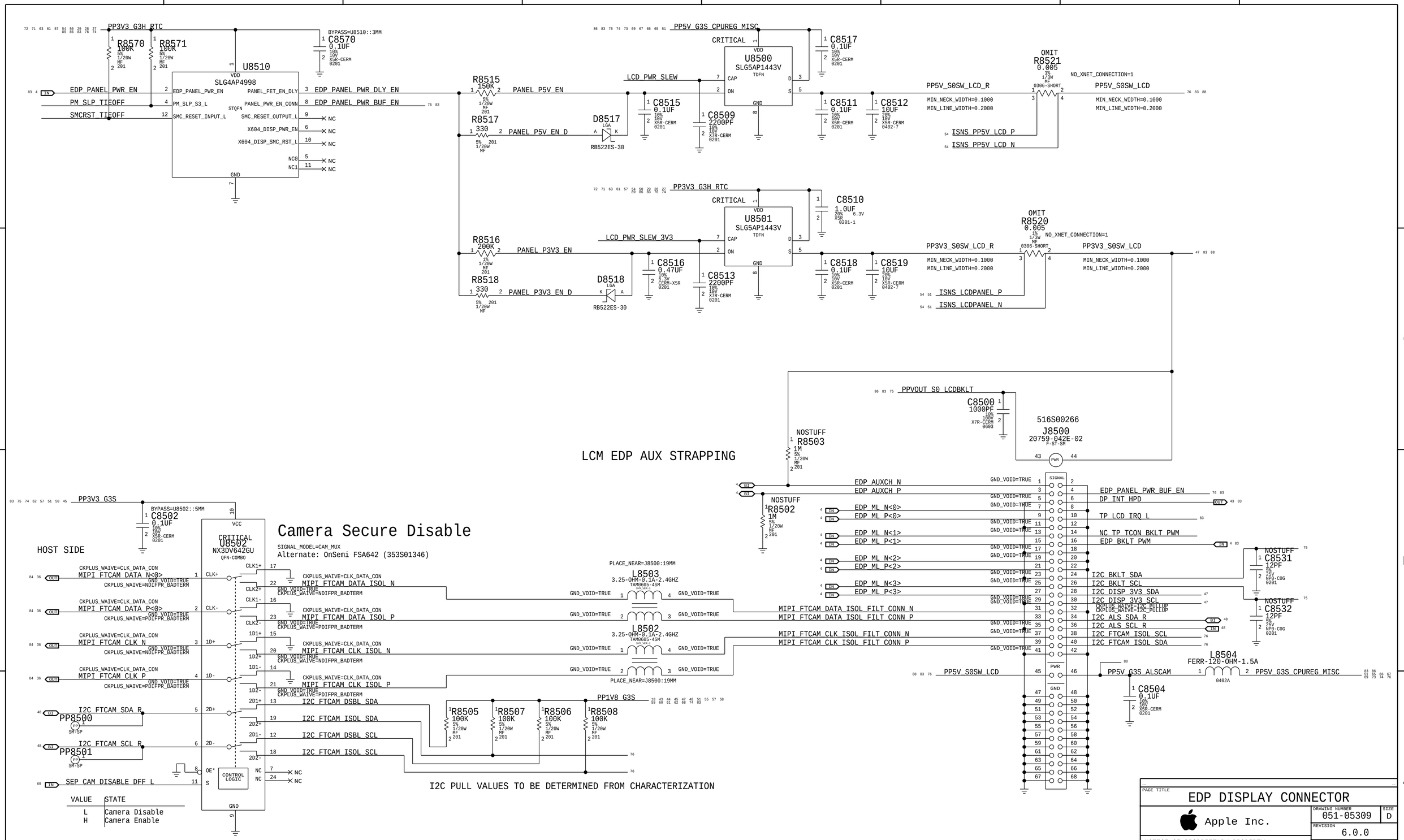

PAGE TITLE
EDP DISPLAY CONNECTOR

Apple Inc.

DRAWING NUMBER 051-05309 | SIZE D
REVISION 6.0.0
BRANCH pvt
PAGE 85 OF 500
SHEET 76 OF 98

NOTICE OF PROPRIETARY PROPERTY:
THE INFORMATION CONTAINED HEREIN IS THE PROPRIETARY PROPERTY OF APPLE INC.
THE POSESSOR AGREES TO THE FOLLOWING:
I TO MAINTAIN THIS DOCUMENT IN CONFIDENCE
II NOT TO REPRODUCE OR COPY IT
III NOT TO REVEAL OR PUBLISH IT IN WHOLE OR PART
IV ALL RIGHTS RESERVED

S4E0

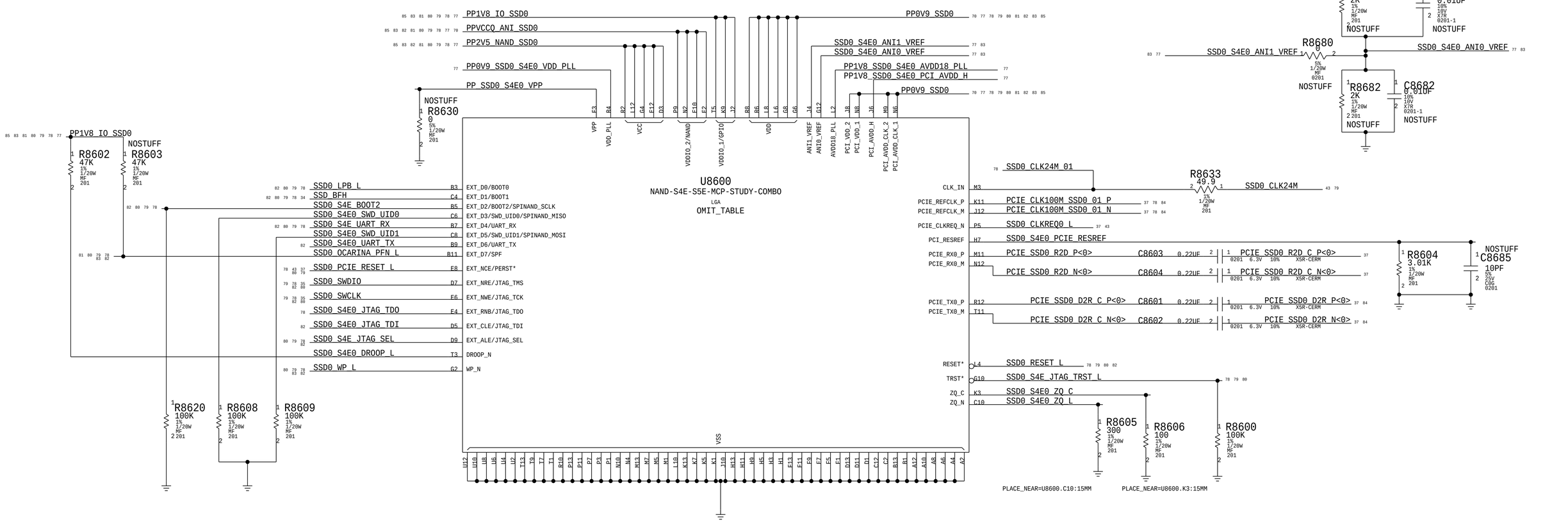

PAGE TITLE	S4E<0>
	Apple Inc.
DRAWING NUMBER	051-05309
SIZE	D
REVISION	6.0.0
BRANCH	pvt
PAGE	86 OF 500
SHEET	77 OF 98

NOTICE OF PROPRIETARY PROPERTY:

THE INFORMATION CONTAINED HEREIN IS THE PROPRIETARY PROPERTY OF APPLE INC. THE POSESSOR AGREES TO THE FOLLOWING:

I TO MAINTAIN THIS DOCUMENT IN CONFIDENCE
II NOT TO REPRODUCE OR COPY IT
III NOT TO REVEAL OR PUBLISH IT IN WHOLE OR PART
IV ALL RIGHTS RESERVED

S4E1

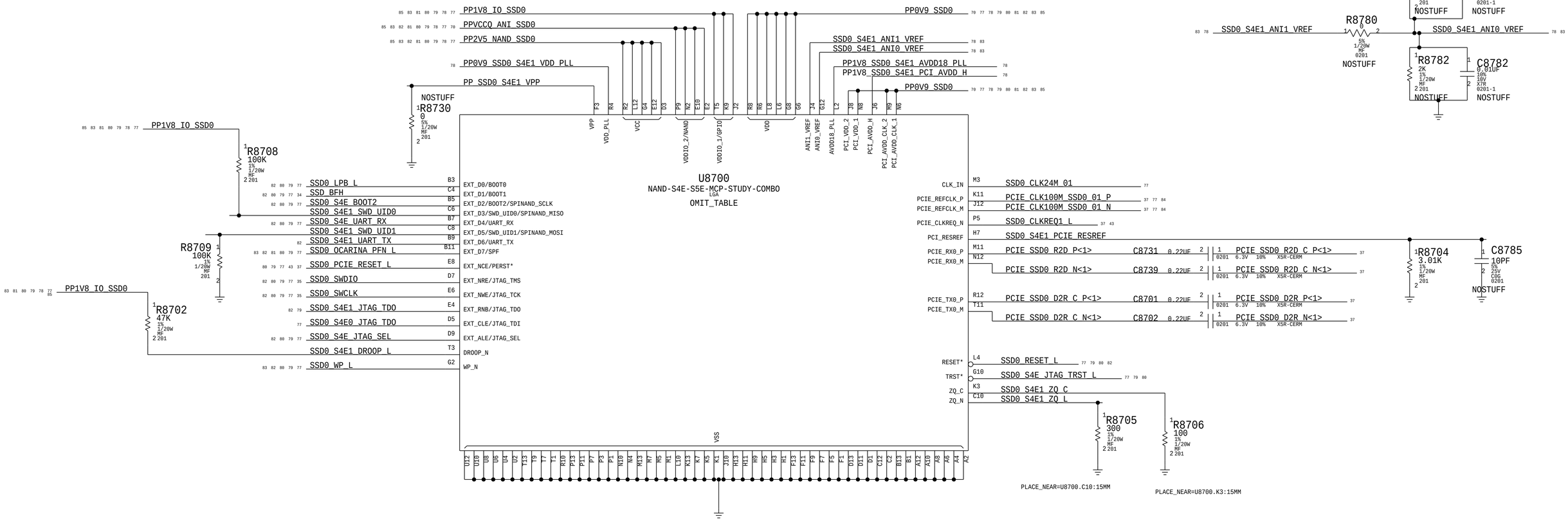

EXTERNAL VREF

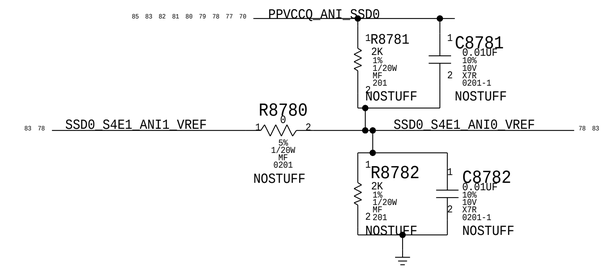

S4E VDD

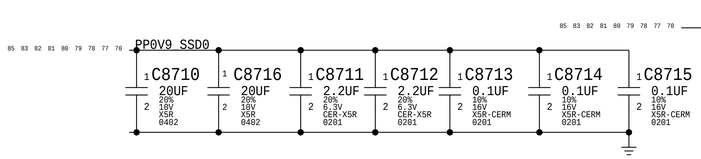

S4E VDDIO_2

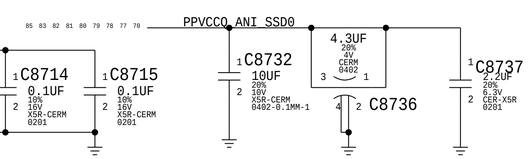

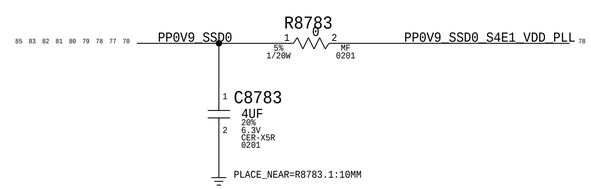

VCC CAP

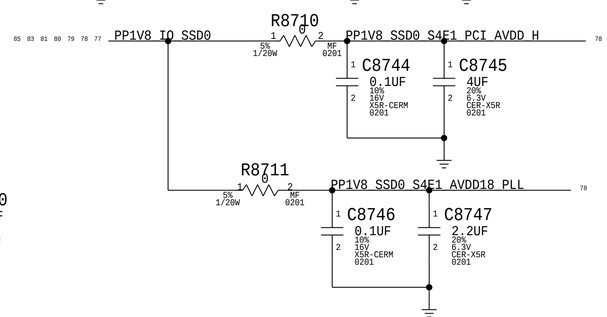

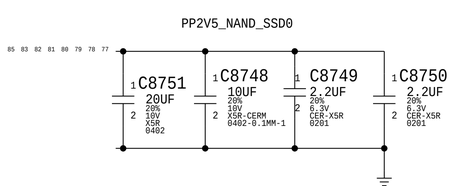

S4E VDDIO_1

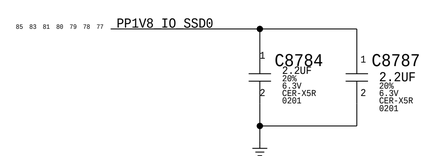

BOM_COST_GROUP=SSD

PAGE TITLE	S4E<1>
Apple Inc.	
DRAWING NUMBER	051-05309
SIZE	D
REVISION	6.0.0
BRANCH	pvt
PAGE	87 OF 500
SHEET	78 OF 98

NOTICE OF PROPRIETARY PROPERTY:
THE INFORMATION CONTAINED HEREIN IS THE PROPRIETARY PROPERTY OF APPLE INC.
THE POSESSOR AGREES TO THE FOLLOWING:
I TO MAINTAIN THIS DOCUMENT IN CONFIDENCE
II NOT TO REPRODUCE OR COPY IT
III NOT TO REVEAL OR PUBLISH IT IN WHOLE OR PART
IV ALL RIGHTS RESERVED

S4E2

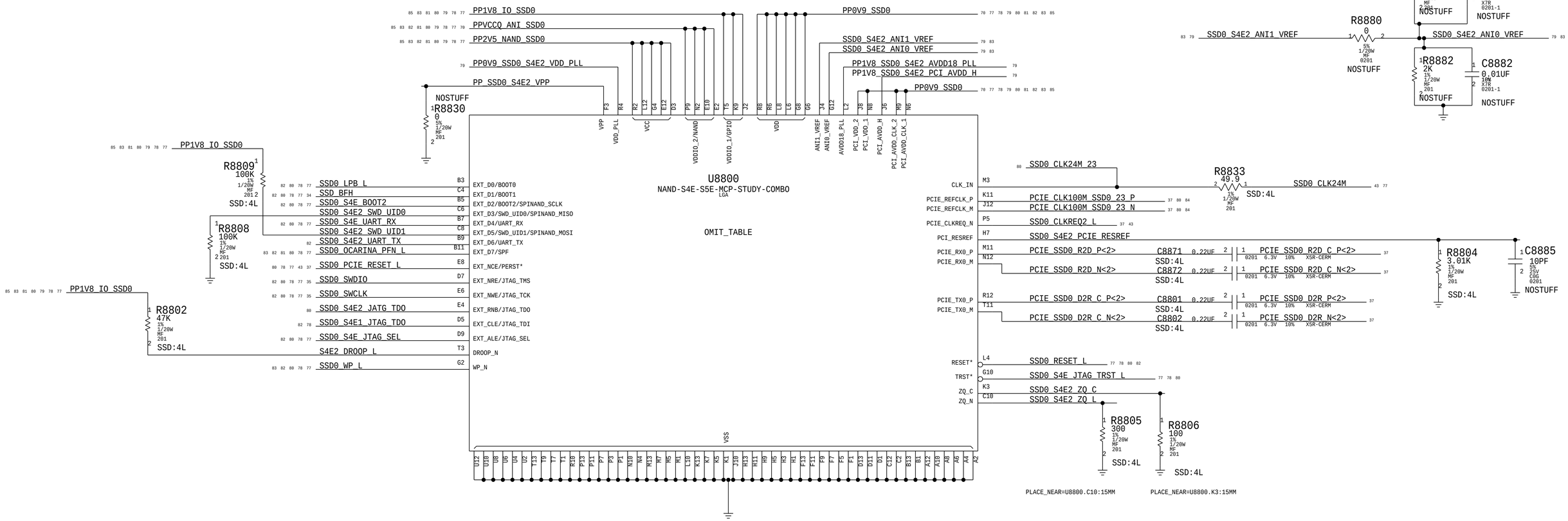

EXTERNAL VREF

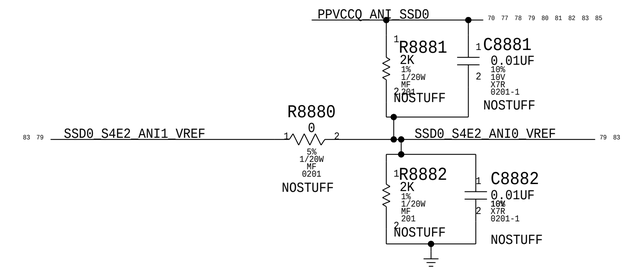

S4E VDD

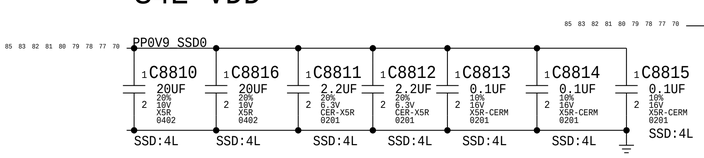

S4E VDDIO_2

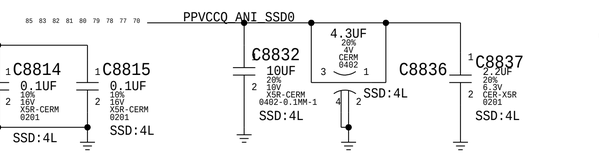

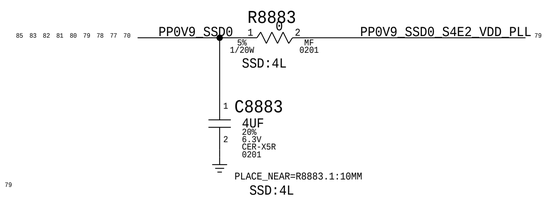

VCC CAP

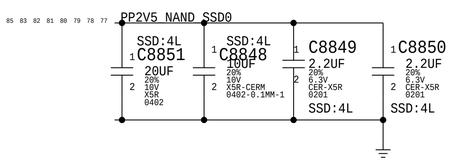

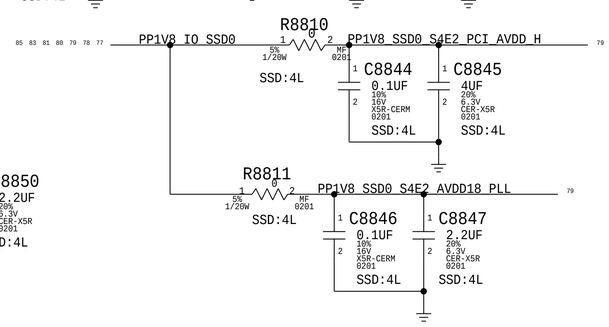

S4E VDDIO_1

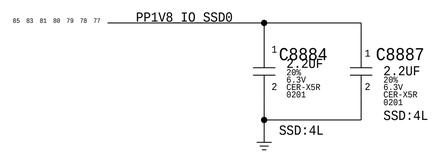

BOM_COST_GROUP=SSD

PAGE TITLE	S4E<2>
Apple Inc.	DRAWING NUMBER 051-05309 · SIZE D
	REVISION 6.0.0
	BRANCH pvt
	PAGE 88 OF 500
	SHEET 79 OF 98

NOTICE OF PROPRIETARY PROPERTY:
THE INFORMATION CONTAINED HEREIN IS THE PROPRIETARY PROPERTY OF APPLE INC.
THE POSESSOR AGREES TO THE FOLLOWING:
I TO MAINTAIN THIS DOCUMENT IN CONFIDENCE
II NOT TO REPRODUCE OR COPY IT
III NOT TO REVEAL OR PUBLISH IT IN WHOLE OR PART
IV ALL RIGHTS RESERVED

S4E3

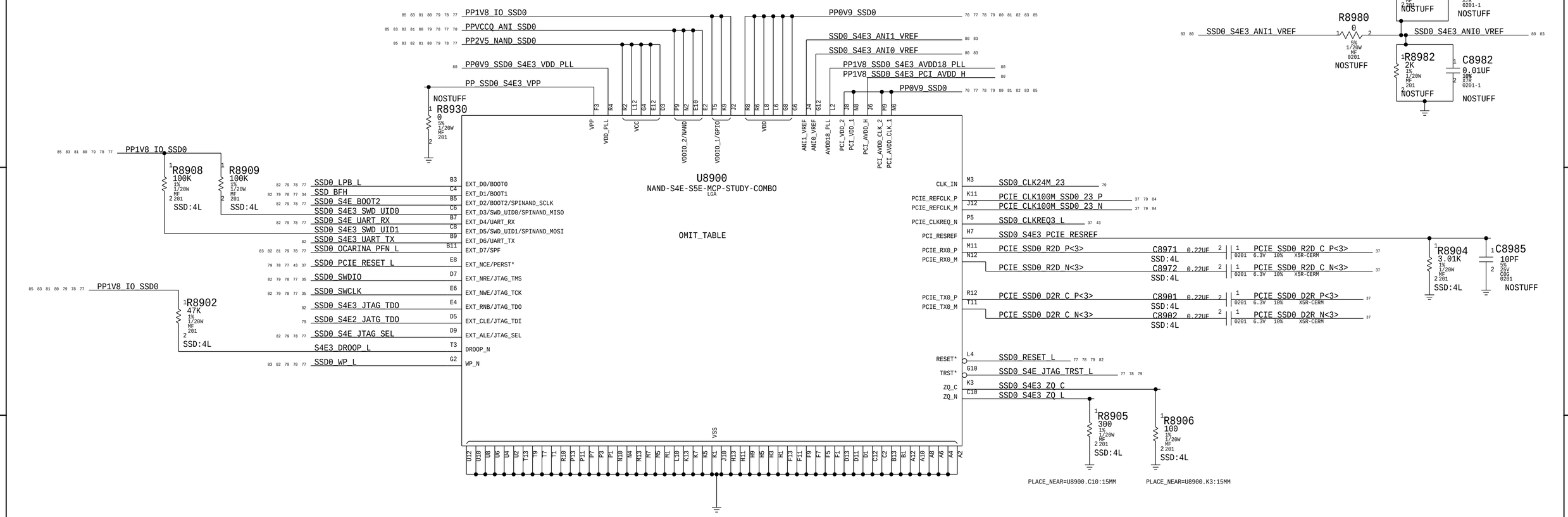

BOM_COST_GROUP=SSD

PAGE TITLE	S4E<3>
Apple Inc.	DRAWING NUMBER 051-05309 SIZE D
	REVISION 6.0.0
	BRANCH pvt
	PAGE 89 OF 500
	SHEET 80 OF 98

NOTICE OF PROPRIETARY PROPERTY:
THE INFORMATION CONTAINED HEREIN IS THE PROPRIETARY PROPERTY OF APPLE INC.
THE POSESSOR AGREES TO THE FOLLOWING:
I TO MAINTAIN THIS DOCUMENT IN CONFIDENCE
II NOT TO REPRODUCE OR COPY IT
III NOT TO REVEAL OR PUBLISH IT IN WHOLE OR PART
IV ALL RIGHTS RESERVED

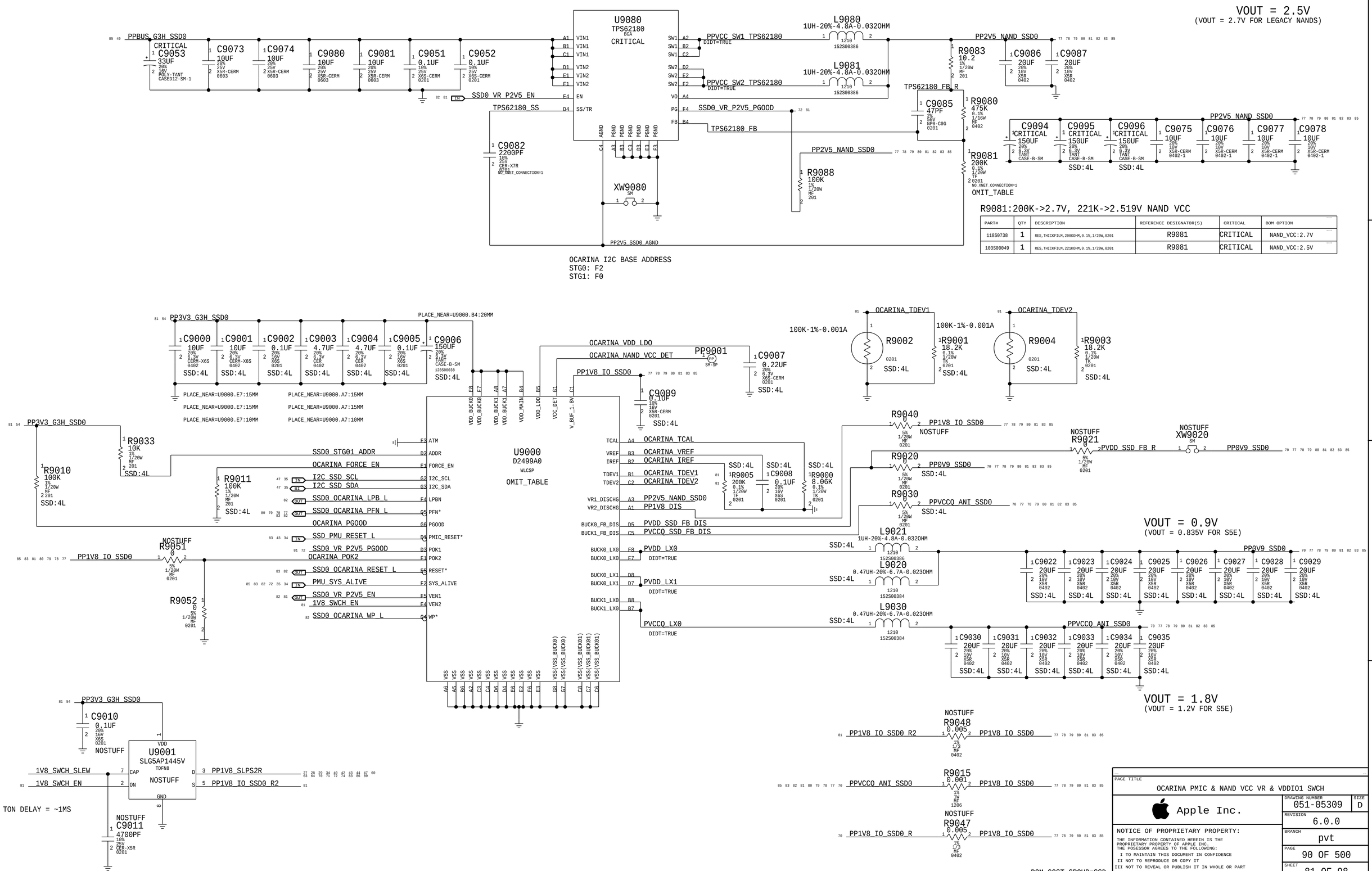

R9081:200K->2.7V, 221K->2.519V NAND VCC

PART#	QTY	DESCRIPTION	REFERENCE DESIGNATOR(S)	CRITICAL	BOM OPTION
118S0738	1	RES,THICKFILM,200KOHM,0.1%,1/20W,0201	R9081	CRITICAL	NAND_VCC:2.7V
103S00049	1	RES,THICKFILM,221KOHM,0.1%,1/20W,0201	R9081	CRITICAL	NAND_VCC:2.5V

PAGE TITLE: OCARINA PMIC & NAND VCC VR & VDDIO1 SWCH

Apple Inc.

DRAWING NUMBER: 051-05309 SIZE: D

REVISION: 6.0.0

BRANCH: pvt

PAGE: 90 OF 500

SHEET: 81 OF 98

NOTICE OF PROPRIETARY PROPERTY:
THE INFORMATION CONTAINED HEREIN IS THE PROPRIETARY PROPERTY OF APPLE INC.
THE POSESSOR AGREES TO THE FOLLOWING:
I TO MAINTAIN THIS DOCUMENT IN CONFIDENCE
II NOT TO REPRODUCE OR COPY IT
III NOT TO REVEAL OR PUBLISH IT IN WHOLE OR PART
IV ALL RIGHTS RESERVED

SSD0

PMU BUCK 9 & 10 REMOTE SENSE OPTIONS

85 83 81 80 79 78 77 70 PP0V9_SSD0 — XW9650 (SM, PLACE_NEAR=U8600:5MM) — P0V9SSD_FB_R_P — NOSTUFF R9655 0 (0201 5% 1/20W MF, PLACE_NEAR=R7822:1MM) — P0V9SSD_FB_P OUT 70

XW9651 (SM, PLACE_NEAR=XW9650:1MM) — P0V9SSD_FB_R_N — NOSTUFF R9656 0 (0201 5% 1/20W MF, PLACE_NEAR=R7823:5MM) — P0V9SSD_FB_N OUT 70

85 83 82 81 80 79 78 77 70 PPVCCQ_ANI_SSD0 — XW9652 (SM, PLACE_NEAR=U8600.P9:5MM) — PVCCQSSD_FB_R — NOSTUFF R9657 0 (0201 5% 1/20W MF, PLACE_NEAR=R7824.1:1MM) — PVCCQSSD_FB OUT 70

77 SSD0_S4E0_JTAG_TDI — PP9601 (P2MM SM PP)

80 79 78 77 35 SSD0_SWDIO — PP9602 (P2MM SM PP)

82 80 79 78 77 35 SSD0_SWCLK — PP9603 (P2MM SM PP)

80 79 78 77 SSD0_S4E_JTAG_SEL — PP9604 (P2MM SM PP)

80 79 78 77 SSD0_S4E_UART_RX — PP9605 (P2MM SM PP)

PP9606 (P2MM SM PP) — SSD0_S4E3_JTAG_TDO — 80 82

PP9608 (P2MM SM PP) — SSD_BFH — 34 77 78 79 80

PP9609 (P2MM SM PP) — SSD0_S4E_BOOT2 — 77 78 79 80

PP9610 (P2MM SM PP) — SSD0_S4E_UART_TX

PP9611 (P2MM SM PP) — SSD0_OCARINA_LPB_L — 81 82

R9651 0 (1/20W MF 0201) — SSD0_S4E0_UART_TX — 77

R9652 NOSTUFF 0 (5% 1/20W MF 0201) — SSD0_S4E1_UART_TX — 78

R9653 NOSTUFF 0 (5% 1/20W MF 0201) — SSD0_S4E2_UART_TX — 79

R9654 NOSTUFF 0 (5% 1/20W MF 0201) — SSD0_S4E3_UART_TX — 80

SSD0_SWCLK — 35 77 78 79 80 82

NOSTUFF R9679 49.9 (1% 1/20W MF 201)

SSD0_SWCLK_R — NOSTUFF C9679 100PF (5% 25V C0G 0201)

79 78 SSD0_S4E1_JTAG_TDO — SSD:2L R9674 0 (5% 1/20W MF 0201) — SSD0_S4E3_JTAG_TDO — 80 82

85 83 81 80 79 78 77 PP2V5_NAND_SSD0

SSD:2L R9620 24.9 (1% 1/10W MF-LF 603)

SSD:2L R9621 24.9 (1% 1/10W MF-LF 603)

SSD:2L R9622 24.9 (1% 1/10W MF-LF 603)

SSD:2L R9623 24.9 (1% 1/10W MF-LF 603)

SSD:2L R9624 24.9 (1% 1/10W MF-LF 603)

SSD:2L R9625 24.9 (1% 1/10W MF-LF 603)

P2V5_SSD_DISCHARGE

SSD:2L Q9620 DMN2044UCB4 (BGA)

SSD:2L Q9621 DMN2044UCB4 (BGA)

85 83 82 81 80 79 78 77 70 PPVCCQ_ANI_SSD0 — SSD:2L R9610 100 (5% 1/20W MF 201)

81 SSD0_OCARINA_WP_L — SSD:4L R9612 0 (5% 1/20W MF 0201) — SSD0_WP_L — 77 78 79 80 83

82 81 SSD0_OCARINA_LPB_L — SSD:4L R9614 0 (5% 1/20W MF 0201) — SSD0_LPB_L — 77 78 79 80

72 SSD0_PMIC_DISCHARGE_EN — SSD:2L R9605 10K (5% 1/20W MF 201) — PMIC_DISCHARGE_EN_RC

SSD:2L R9606 10K (5% 1/20W MF 201)

SSD:2L C9605 33000PF (10% 6.3V X5R 201)

72 SSD0_PMIC_RESET_L — SSD:2L R9615 0 (5% 1/20W MF 0201) — SSD0_RESET_L — 77 78 79 80

83 81 SSD0_OCARINA_RESET_L — SSD:4L R9616 0 (5% 1/20W MF 0201)

85 83 81 72 35 34 PMU_SYS_ALIVE — SSD:2L R9617 0 (5% 1/20W MF 0201) — SSD0_OCARINA_PFN_L — 77 78 79 80 81 83

72 IN SSD0_PMIC_VR_P2V5_EN — SSD:2L R9618 0 (5% 1/20W MF 0201) — SSD0_VR_P2V5_EN OUT 81

BOM_COST_GROUP=SSD

PAGE TITLE: SSD SUPPORT

Apple Inc.

DRAWING NUMBER: 051-05309 — SIZE: D

REVISION: 6.0.0

BRANCH: pvt

PAGE: 96 OF 500

SHEET: 82 OF 98

NOTICE OF PROPRIETARY PROPERTY:
THE INFORMATION CONTAINED HEREIN IS THE PROPRIETARY PROPERTY OF APPLE INC.
THE POSESSOR AGREES TO THE FOLLOWING:
I TO MAINTAIN THIS DOCUMENT IN CONFIDENCE
II NOT TO REPRODUCE OR COPY IT
III NOT TO REVEAL OR PUBLISH IT IN WHOLE OR PART
IV ALL RIGHTS RESERVED

Functional Test Points

J5110 - DFR Display Connector

46	IN	DFR_DISP_VSYNC	FUNC_TEST=TRUE
46 36	IN	DFR_DISP_TE	FUNC_TEST=TRUE
46 34	IN	DFR_DISP_INT	FUNC_TEST=TRUE
46 36	IN	DFR_DISP_RESET_L	FUNC_TEST=TRUE
46	IN	PP3V3_G3HSW_DFR	FUNC_TEST=TRUE
46	IN	MIPI_DFR_CLK_FILT_CONN_P	FUNC_TEST=TRUE
46	IN	MIPI_DFR_CLK_FILT_CONN_N	FUNC_TEST=TRUE
46	IN	MIPI_DFR_DATA_FILT_CONN_P	FUNC_TEST=TRUE
46	IN	MIPI_DFR_DATA_FILT_CONN_N	FUNC_TEST=TRUE
87 48 46	IN	PP1V8_DFR	FUNC_TEST=TRUE
48 46	IN	I2C_DFR_SCL_R	FUNC_TEST=TRUE
48 46	IN	I2C_DFR_SDA_R	FUNC_TEST=TRUE
		GND	FUNC_TEST=TRUE

6 TPS

J5100 - DFR Touch Connector

46	IN	DFR_TOUCH_LID_OPEN_L	FUNC_TEST=TRUE
46 36	IN	DFR_TOUCH_RESET_L	FUNC_TEST=TRUE
46 34	IN	DFR_PWR_EN	FUNC_TEST=TRUE
46	IN	TP_DFR_TOUCH_GPIO2	FUNC_TEST=TRUE
46	IN	PP5V_G3S_DFR_FILT	FUNC_TEST=TRUE
46 36	IN	SPI_DFR_CS_L	FUNC_TEST=TRUE
46 43	IN	SPI_DFR_MOSI	FUNC_TEST=TRUE
46 43	IN	SPI_DFR_MISO_R	FUNC_TEST=TRUE
46 43	IN	SPI_DFR_CLK	FUNC_TEST=TRUE
46 35	IN	DFR_TOUCH_INT_L	FUNC_TEST=TRUE
46 36	IN	DFR_TOUCH_CLK32K_RESET_L	FUNC_TEST=TRUE
46	IN	TP_DFR_TOUCH_PANEL_DETECT	FUNC_TEST=TRUE
46	IN	TP_DFR_TOUCH_ROM_WC	FUNC_TEST=TRUE
		GND	FUNC_TEST=TRUE

6 TPS

J6700 - Keyboard Connector

85 75 52	IN	PP5V_G3S_KBD	FUNC_TEST=TRUE
86 75	IN	PPVOUT_S0_KBDLED	FUNC_TEST=TRUE
75	IN	PP_KBDLED_CATHODE1	FUNC_TEST=TRUE
75	IN	PP_KBDLED_CATHODE2	FUNC_TEST=TRUE
75 34	IN	SOC_KBD_BKLT_PWM_R	FUNC_TEST=TRUE
61	IN	KBD_ID1	FUNC_TEST=TRUE
61	IN	KBD_DRIVE_Y0	FUNC_TEST=TRUE
61	IN	KBD_DRIVE_Y1	FUNC_TEST=TRUE
61	IN	KBD_DRIVE_Y2	FUNC_TEST=TRUE
61	IN	KBD_DRIVE_Y3	FUNC_TEST=TRUE
61	IN	KBD_DRIVE_Y4	FUNC_TEST=TRUE
61	IN	KBD_DRIVE_Y5	FUNC_TEST=TRUE
61	IN	KBD_DRIVE_Y6	FUNC_TEST=TRUE
61	IN	KBD_DRIVE_Y7	FUNC_TEST=TRUE
61	IN	KBD_SENSE_X0	FUNC_TEST=TRUE
61	IN	KBD_SENSE_X1	FUNC_TEST=TRUE
61	IN	KBD_SENSE_X2	FUNC_TEST=TRUE
61	IN	KBD_SENSE_X3	FUNC_TEST=TRUE
61	IN	KBD_SENSE_X4	FUNC_TEST=TRUE
61	IN	KBD_SENSE_X5	FUNC_TEST=TRUE
61	IN	KBD_SENSE_X6	FUNC_TEST=TRUE
61	IN	KBD_SENSE_X7	FUNC_TEST=TRUE
61	IN	KBD_SENSE_X8	FUNC_TEST=TRUE
61	IN	KBD_SENSE_X9	FUNC_TEST=TRUE
61	IN	KBD_SENSE_X10	FUNC_TEST=TRUE
61	IN	KBD_SENSE_X11	FUNC_TEST=TRUE
61	IN	KBD_SENSE_X12	FUNC_TEST=TRUE
61	IN	KBD_CAP_CATHODE	FUNC_TEST=TRUE
61	IN	PP3V3_G3H_RSLOC	FUNC_TEST=TRUE
61	IN	KBD_RIGHT_SHIFT_KEY	FUNC_TEST=TRUE
61	IN	KBD_LEFT_OPTION_KEY	FUNC_TEST=TRUE
61	IN	KBD_CONTROL_KEY	FUNC_TEST=TRUE
62 61	IN	I2C_KBD_SDA	FUNC_TEST=TRUE
62 61	IN	I2C_KBD_SCL	FUNC_TEST=TRUE
62 61	IN	KBD_INT_L	FUNC_TEST=TRUE
72 63 61 89	IN	PMU_RSLOC_RST_L	FUNC_TEST=TRUE
75	IN	PPVOUT_S0_KBDLED_R	FUNC_TEST=TRUE
61	IN	KBD_CAPSLOCK_LED	FUNC_TEST=TRUE
61	IN	IOXP_I2C_SCL	FUNC_TEST=TRUE
61	IN	IOXP2_INT_L	FUNC_TEST=TRUE
61	IN	IOXP_I2C_SDA	FUNC_TEST=TRUE
		GND	FUNC_TEST=TRUE

6 TPS

J6801 - TRACKPAD CONNECTOR

		ACT_GND	
62	IN	PP5V_G3S_TPAD_CONN	FUNC_TEST=TRUE
62	IN	PP3V3_G3S_TPAD	FUNC_TEST=TRUE
62 51	IN	I2C_TPAD_3V3_SDA	FUNC_TEST=TRUE
62	IN	I2C_TPAD_3V3_SCL	FUNC_TEST=TRUE
85 62	IN	SPI_TPAD_3V3_CLK	FUNC_TEST=TRUE
62	IN	SPI_TPAD_3V3_MISO	FUNC_TEST=TRUE
62	IN	SPI_TPAD_3V3_CS_L	FUNC_TEST=TRUE
62	IN	SPI_TPAD_3V3_MOSI	FUNC_TEST=TRUE
62	IN	TPAD_3V3_SPI_EN	FUNC_TEST=TRUE
62	IN	TPAD_3V3_SPI_INT_L	FUNC_TEST=TRUE
62	IN	TPAD_3V3_ACTUATOR_DISABLE_L	FUNC_TEST=TRUE
62 35	IN	TPAD_KBD_WAKE_L	FUNC_TEST=TRUE
		GND	FUNC_TEST=TRUE

6 TPS

J6640 - MIC Connector

60 43	IN	PDM_DMIC_CLK0	FUNC_TEST=TRUE
	IN	AUD_DMIC0_DATA_CONN	FUNC_TEST=TRUE
60	IN	PP1V8_DMIC	FUNC_TEST=TRUE
60 43	IN	PDM_DMIC_CLK1	FUNC_TEST=TRUE
60	IN	AUD_DMIC1_DATA_CONN	FUNC_TEST=TRUE
		GND	FUNC_TEST=TRUE

3 TPS

J6410 - REAR LEFT CONNECTOR

58	IN	SPKRCONN_RL_OUTP	FUNC_TEST=TRUE
58	IN	SPKRCONN_RL_OUTN	FUNC_TEST=TRUE
58 36	IN	SPKR_ID0	FUNC_TEST=TRUE
		GND	FUNC_TEST=TRUE

4 TPS

2 TPS

J6410 - FRONT LEFT CONNECTOR

	IN	SPKRCONN_FL_OUTP	FUNC_TEST=TRUE
58	IN	SPKRCONN_FL_OUTN	FUNC_TEST=TRUE
		GND	FUNC_TEST=TRUE

2 TPS

J6510 - REAR RIGHT CONNECTOR

59	IN	SPKRCONN_RR_OUTP	FUNC_TEST=TRUE
59	IN	SPKRCONN_RR_OUTN	FUNC_TEST=TRUE
59 36	IN	SPKR_ID1	FUNC_TEST=TRUE
		GND	FUNC_TEST=TRUE

1 TPS

2 TPS

J6550 - FRONT RIGHT CONNECTOR

59	IN	SPKRCONN_FR_OUTP	FUNC_TEST=TRUE
59	IN	SPKRCONN_FR_OUTN	FUNC_TEST=TRUE
		GND	FUNC_TEST=TRUE

2 TPS

J6600 - Audio Jack Connector

60	IN	AUD_CONN_HP_LEFT	FUNC_TEST=TRUE
60	IN	AUD_CONN_HP_RIGHT	FUNC_TEST=TRUE
60	IN	AUD_CONN_RING2	FUNC_TEST=TRUE
60	IN	AUD_CONN_SLEEVE	FUNC_TEST=TRUE
60	IN	AUD_CONN_HP_SENSE_L	FUNC_TEST=TRUE
60	IN	AUD_CONN_HP_SENSE_R	FUNC_TEST=TRUE
60	IN	AUD_CONN_TIP_SENSE	FUNC_TEST=TRUE
60	IN	AUD_CONN_RING_SENSE	FUNC_TEST=TRUE
60	IN	AUD_CONN_SLEEVE_XW	FUNC_TEST=TRUE
60	IN	AUD_CONN_RING2_XW	FUNC_TEST=TRUE
		GND	FUNC_TEST=TRUE

2 TPS

J6950 - Battery Connector

64 63	IN	PPVBAT_G3H_CONN	FUNC_TEST=TRUE
		GND	FUNC_TEST=TRUE

8 TPS

8 TPS

J6951 - BATTERY SENSE CONNECTOR

86 63	IN	SYS_DETECT_L	FUNC_TEST=TRUE
63	IN	SYS_DETECT	FUNC_TEST=TRUE
63	IN	SMBUS_3V3_BATT_SCL	FUNC_TEST=TRUE
63	IN	SMBUS_3V3_BATT_SDA	FUNC_TEST=TRUE
74 72 50 49	IN	SENSOR_PWR_EN	FUNC_TEST=TRUE
		GND	FUNC_TEST=TRUE

1 TPS

J6001 FAN CONNECTOR

55	IN	GND_FAN	0
55	IN	PP5V_G3S_FAN	FUNC_TEST=TRUE
55	IN	FAN_RT_TACH	FUNC_TEST=TRUE
55	IN	FAN_RT_PWM	FUNC_TEST=TRUE

2 TPS

2 TPS

J4900 - Mesa Connector

60 44	IN	PP3V0_MESA_FILT_CONN	FUNC_TEST=TRUE
44 60	IN	PP16V0_MESA_FILT_CONN	FUNC_TEST=TRUE
60 44	IN	PP1V8_MESA_FILT_CONN	FUNC_TEST=TRUE
60 44	IN	SPI_MESA_MISO_CONN	FUNC_TEST=TRUE
60 44	IN	SPI_MESA_MOSI_CONN	FUNC_TEST=TRUE
60 44	IN	SPI_MESA_CLK_CONN	FUNC_TEST=TRUE
60 44	IN	MESA_INT_CONN	FUNC_TEST=TRUE
60 44	IN	MESA_BOOST_EN_CONN	FUNC_TEST=TRUE
89 60 44	IN	PMU_ONOFF_R_L_CONN	FUNC_TEST=TRUE
		GND	FUNC_TEST=TRUE

2 TPS

1 TPS

1 TPS

4 TPS

2 TPS

3 TPS

1 TPS

6 TPS

J8500 - eDP Connector

86 75	IN	PPVOUT_S0_LCDBKLT_F	FUNC_TEST=TRUE
86 76 75	IN	PPVOUT_S0_LCDBKLT	FUNC_TEST=TRUE
76 4	IN	EDP_BKLT_PWM	FUNC_TEST=TRUE
75 4	IN	EDP_BKLT_EN	FUNC_TEST=TRUE
76 4	IN	EDP_PANEL_PWR_EN	FUNC_TEST=TRUE
76	IN	TP_LCD_IRQ_L	FUNC_TEST=TRUE
76 43	IN	DP_INT_HPD	FUNC_TEST=TRUE
76	IN	EDP_PANEL_PWR_BUF_EN	FUNC_TEST=TRUE
	IN	PP3V3_S0SW_LCD	FUNC_TEST=TRUE
88 76	IN	PP5V_S0SW_LCD	FUNC_TEST=TRUE
86 76 74 73 69 67 66 65 51	IN	PP5V_G3S_CPUREG_MISC	FUNC_TEST=TRUE
75	IN	PPVIN_S0SW_LCDBKLT	FUNC_TEST=TRUE
		GND	FUNC_TEST=TRUE

1 TPS

12 TPS

J3300 - Left USB-C Connector

87 30 28 27	IN	PP20V_USBC_XA_VBUS	FUNC_TEST=TRUE
30 28	IN	USBC_XA_CC1	FUNC_TEST=TRUE
30 28	IN	USBC_XA_CC2	FUNC_TEST=TRUE
30 28	IN	USBC_XA_SBU1	FUNC_TEST=TRUE
	IN	USBC_XA_SBU2	FUNC_TEST=TRUE
87 30 29	IN	PP20V_USBC_XB_VBUS	FUNC_TEST=TRUE
30 29	IN	USBC_XB_CC1	FUNC_TEST=TRUE
30 29	IN	USBC_XB_CC2	FUNC_TEST=TRUE
30 29	IN	USBC_XB_SBU1	FUNC_TEST=TRUE
30 29	IN	USBC_XB_SBU2	FUNC_TEST=TRUE
30	IN	TP_USBC_PP20V_XA	FUNC_TEST=TRUE
30	IN	TP_USBC_PP20V_XB	FUNC_TEST=TRUE
89 28	IN	USB_SOC_TYPEC_P	FUNC_TEST=TRUE
89 28	IN	USB_SOC_TYPEC_N	FUNC_TEST=TRUE
		GND	FUNC_TEST=TRUE

48 TPS

29 27	IN	USB3_BSSB_D2R_R_P	FUNC_TEST=TRUE
29 27	IN	USB3_BSSB_D2R_R_N	FUNC_TEST=TRUE
	IN	USB3_BSSB_R2D_P	FUNC_TEST=TRUE
29 27	IN	USB3_BSSB_R2D_N	FUNC_TEST=TRUE
		GND	FUNC_TEST=TRUE

12 TPS

PROBE BLOCK GRID - DFU/SOC/DCI

14	IN	TP_USB3_EXTC_R2D_C_N
14	IN	TP_USB_FIXT1_N
14	IN	TP_USB3_EXTC_D2R_N

JC400
SWDL
OMIT SM-TP-0.5MM

14	IN	TP_USB3_EXTC_D2R_P	1	USB3_D2R_P	USB3_D2R_N 2
			3	GND	GND 4
14	IN	TP_USB_FIXT1_P	5	USB2_D_P	USB2_D_N 6
			7	GND	GND 8
14	IN	TP_USB3_EXTC_R2D_C_P	9	USB3_R2D_P	USB3_R2D_N 10
		GND			

14	IN	USB3_EXTD_R2D_C_N
14	IN	TP_USB_FIXT2_N
14	IN	USB3_EXTD_D2R_N

JC410
SWDL
OMIT SM-TP-0.5MM

14	IN	USB3_EXTD_D2R_P	1	USB3_D2R_P	USB3_D2R_N 2
			3	GND	GND 4
14	IN	TP_USB_FIXT2_P	5	USB2_D_P	USB2_D_N 6
			7	GND	GND 8
14	IN	USB3_EXTD_R2D_C_P	9	USB3_R2D_P	USB3_R2D_N 10
		GND			

Hall Effect

43 35	IN	SMC_LID_LEFT	FUNC_TEST=TRUE
43 35	IN	SMC_LID_RIGHT	FUNC_TEST=TRUE
62 46 43	IN	IPD_LID_OPEN	FUNC_TEST=TRUE
		GND	FUNC_TEST=TRUE

1 TPS

DFU/SOC/FCT DEBUG

34 27	IN	SOC_USB_VBUS	FUNC_TEST=TRUE
89 72 34 28	IN	SOC_FORCE_DFU	FUNC_TEST=TRUE
34 28	IN	SOC_DFU_STATUS	FUNC_TEST=TRUE
35 29 28	IN	SOC_DOCK_CONNECT	FUNC_TEST=TRUE
89	IN	DFUMUX_SEL	FUNC_TEST=TRUE
13	IN	SOC_SWD_MUX_SEL_PCH	FUNC_TEST=TRUE
35	IN	SOC_COLD_RESET_L	FUNC_TEST=TRUE
89 34	IN	USB_SOC_N	FUNC_TEST=TRUE
89 34	IN	USB_SOC_P	FUNC_TEST=TRUE
27 12	IN	PCH_UART_DEBUG_R2D	FUNC_TEST=TRUE
27 12	IN	PCH_UART_DEBUG_D2R	FUNC_TEST=TRUE
29 27	IN	SWD_SOC_SWCLK_XB	FUNC_TEST=TRUE
29 27	IN	SWD_SOC_SWDIO_XB	FUNC_TEST=TRUE
35	IN	DEBUG_JTAG_SOC_TDI	FUNC_TEST=TRUE
35	IN	DEBUG_JTAG_SOC_TDO	FUNC_TEST=TRUE
35	IN	TP_JTAG_SOC_TRST_L	FUNC_TEST=TRUE
89 35	IN	SMC_DEBUGPRT_TX	FUNC_TEST=TRUE
89 35	IN	SMC_DEBUGPRT_RX	FUNC_TEST=TRUE
36	IN	SOC_DEBUGPRT_TX	FUNC_TEST=TRUE
36	IN	SOC_DEBUGPRT_RX	FUNC_TEST=TRUE
72 47 35	IN	I2C_PWR_SCL	FUNC_TEST=TRUE
72 47 35	IN	I2C_PWR_SDA	FUNC_TEST=TRUE
47 35 29 27	IN	I2C_UPC_SCL	FUNC_TEST=TRUE
47 35 29 27	IN	I2C_UPC_SDA	FUNC_TEST=TRUE
		GND	FUNC_TEST=TRUE

7 TPS

1 TPS

10 TPS

DFU/SOC/FCT DISCHARGE

64	IN	PPDCIN_G3H_CHGR	FUNC_TEST=TRUE
64	IN	PPVBAT_G3H_CHGR_REG	FUNC_TEST=TRUE

Memory Power

23 22 21 20 19 18 88 74 70 16	IN	PP1V2_S3	FUNC_TEST=TRUE
73 72	IN	PVDDQ_PGOOD	FUNC_TEST=TRUE
89 73 72	IN	PVDDQ_EN	FUNC_TEST=TRUE
88 51 23 22 21 20	IN	PP1V8_S3_MEM	FUNC_TEST=TRUE
88 50 9 7 6	IN	PP1V2_S3_CPUDDR	FUNC_TEST=TRUE
88 73 24	IN	PP0V6_S0_DDRVTT	FUNC_TEST=TRUE
		GND	FUNC_TEST=TRUE

4 TPS

4 TPS

5 TPS

Wireless/BT Power

50 32	IN	PP3V3_G3S_WLANBT	FUNC_TEST=TRUE
51 32	IN	PP1V8_G3S_WLANBT	FUNC_TEST=TRUE
		GND	FUNC_TEST=TRUE

2 TPS

DFU/SOC/FCT DMM/Power Sequence

87 64 49 27	IN	PPDCIN_G3H	FUNC_TEST=TRUE
86 74 69 63 54 52	IN	PP3V3_G3H	FUNC_TEST=TRUE
87 66 50 9 7	IN	PPVCC_S0_CPU	FUNC_TEST=TRUE
87 67 50 10 7	IN	PPVCCGT_S0_CPU	FUNC_TEST=TRUE
87 66 52 9 7	IN	PPVCCSA_S0_CPU	FUNC_TEST=TRUE
87 73 9 7 4	IN	PPVCCIO_S0_CPU	FUNC_TEST=TRUE
86 69 9 7	IN	PPVCCEDRAM_S0_CPU	FUNC_TEST=TRUE
71 18 9 7	IN	PP1V_S0SW	FUNC_TEST=TRUE
74 9 7	IN	PP1V2_S0SW	FUNC_TEST=TRUE
70 69 65 42 18 17 9 7 5	IN	PP1V_S3	FUNC_TEST=TRUE
86 73 70 54 16 11 7	IN	PP1V_PRIM	FUNC_TEST=TRUE
86 70 54 11 7	IN	PPVPCORE_S5	FUNC_TEST=TRUE
71 13 11 7	IN	PP3V_G3H_RTC	FUNC_TEST=TRUE
72 18	IN	ALL_SYS_PWRGD	FUNC_TEST=TRUE
72 14	IN	PCH_RTC_RESET_L	FUNC_TEST=TRUE
42 13	IN	PM_PCH_PWROK	FUNC_TEST=TRUE
42 13	IN	PM_PCH_SYS_PWROK	FUNC_TEST=TRUE
42 16 13	IN	PM_RSMRST_L	FUNC_TEST=TRUE
89 25 15 13 12	IN	PM_SLP_S3_L	FUNC_TEST=TRUE
89 72 35 18	IN	PM_SLP_S0_L	FUNC_TEST=TRUE
18 17 15 13	IN	PLT_RST_L	FUNC_TEST=TRUE
85 72 17 5	IN	PM_THRMTRIP_L	FUNC_TEST=TRUE
72 16 13	IN	PCH_PWRBTN_L	FUNC_TEST=TRUE
5	IN	CPU_PROCHOT_R_L	FUNC_TEST=TRUE
72 5	IN	CPU_CATERR_L	FUNC_TEST=TRUE
72 65	IN	CPU_VR_READY	FUNC_TEST=TRUE
72 68	IN	PMU_PVDDMAIN_EN	FUNC_TEST=TRUE
85 72 63 29 28	IN	UPC_PMU_RESET	FUNC_TEST=TRUE
72 71 63 61 57 54 50 29 28 27 89 86 76 74	IN	PP3V3_G3H_RTC	FUNC_TEST=TRUE
64 63	IN	CHGR_EN_MVR	FUNC_TEST=TRUE
74 72	IN	P3V3G3S_EN	FUNC_TEST=TRUE
76 75 74 62 57 51 50 45	IN	PP3V3_G3S	FUNC_TEST=TRUE
89 74 72	IN	P1V8G3S_EN	FUNC_TEST=TRUE
85 81 80 79 78 77	IN	PP1V8_IO_SSD0	FUNC_TEST=TRUE
85 82 81 80 79 78 77 70	IN	PPVCCQ_ANI_SSD0	FUNC_TEST=TRUE
85 82 81 80 79 78 77 70	IN	PP0V9_SSD0	FUNC_TEST=TRUE
85 82 81 80 79 78 77	IN	PP2V5_NAND_SSD0	FUNC_TEST=TRUE
82 80 79 78 77	IN	SSD0_WP_L	FUNC_TEST=TRUE
82 81 80 79 78 77	IN	SSD0_OCARINA_PFN_L	FUNC_TEST=TRUE
82 81	IN	SSD0_OCARINA_RESET_L	FUNC_TEST=TRUE
81 43 34	IN	SSD_PMU_RESET_L	FUNC_TEST=TRUE
71 40	IN	PP3V3_AWAKE	FUNC_TEST=TRUE
85 72 60 35	IN	PMU_COLD_RESET_L	FUNC_TEST=TRUE
89 13	IN	PM_SLP_S4_L	FUNC_TEST=TRUE
89 13	IN	PM_SLP_S5_L	FUNC_TEST=TRUE
35	IN	TP_SMC_FIXTURE_MODE_L	FUNC_TEST=TRUE
60 47 44 43 42 40 34 29 28 27 89 86 81 74 72 71 70 64 63	IN	PP1V8_SLPS2R	FUNC_TEST=TRUE
85 72 34	IN	SOC_SOCHOT_L	FUNC_TEST=TRUE
71 40	IN	PP1V2_AWAKE	FUNC_TEST=TRUE
86 70 43 38	IN	PP0V82_SLPDDR	FUNC_TEST=TRUE
86 70 43 38	IN	PPVDDCPU_AWAKE	FUNC_TEST=TRUE
92 18 17 16 15 14 13 12 11 7 74 73 72 70 69 65 53 47 42	IN	PP1V8_S5	FUNC_TEST=TRUE
87 86 75 72 64 62 49	IN	PPBUS_G3H	FUNC_TEST=TRUE
58 57 55 51 48 47 45 44 43 18 76 74 68 62 61 60 59	IN	PP1V8_G3S	FUNC_TEST=TRUE
89 72 34 28	IN	PMU_ACTIVE_READY	FUNC_TEST=TRUE
47 43 42 18 14 13 12 11 7 5 4 89 74 73 71 69	IN	PP3V3_S5	FUNC_TEST=TRUE
73 72	IN	PVCCIO_EN	FUNC_TEST=TRUE
74 73 71 12	IN	CPU_C10_GATE_L	FUNC_TEST=TRUE
86 70 43 39	IN	PP0V9_SLPDDR	FUNC_TEST=TRUE
71 40 39 34	IN	PP1V1_SLPDDR	FUNC_TEST=TRUE
86 71 70 40 39	IN	PP1V1_SLPS2R	FUNC_TEST=TRUE
72 70 62 43 42 40 37 27	IN	PP1V8_AWAKE	FUNC_TEST=TRUE
70	IN	PP1V8_SLPS2R_PMUVDDGPIO	FUNC_TEST=TRUE
89 72 71	IN	P1V1_SLPDDR_SOCFET_EN	FUNC_TEST=TRUE
72 32	IN	PMU_CLK32K_WLANBT	FUNC_TEST=TRUE
85 72 35	IN	SOC_WDOG	FUNC_TEST=TRUE
72 35	IN	PMU_CLK32K_SOC	FUNC_TEST=TRUE
85 82 81 72 35 34	IN	PMU_SYS_ALIVE	FUNC_TEST=TRUE
72 68	IN	P5VG3S_EN	FUNC_TEST=TRUE
71 39	IN	PP0V8_SLPS2R	FUNC_TEST=TRUE
86 70 38	IN	PPVDDCPUSRAM_AWAKE	FUNC_TEST=TRUE
72 68	IN	P5VG3S_PGOOD	FUNC_TEST=TRUE
42 16 13	IN	PM_SYSRST_L	FUNC_TEST=TRUE
42 35	IN	SMC_SYSRST_L	FUNC_TEST=TRUE
75 68 55 54 52 51 50 46 29 28 86	IN	PP5V_G3S	FUNC_TEST=TRUE
77	IN	SSD0_S4E0_ANI0_VREF	FUNC_TEST=TRUE
77	IN	SSD0_S4E0_ANI1_VREF	FUNC_TEST=TRUE
78	IN	SSD0_S4E1_ANI0_VREF	FUNC_TEST=TRUE
78	IN	SSD0_S4E1_ANI1_VREF	FUNC_TEST=TRUE
79	IN	SSD0_S4E2_ANI0_VREF	FUNC_TEST=TRUE
79	IN	SSD0_S4E2_ANI1_VREF	FUNC_TEST=TRUE
80	IN	SSD0_S4E3_ANI0_VREF	FUNC_TEST=TRUE
80	IN	SSD0_S4E3_ANI1_VREF	FUNC_TEST=TRUE
		GND	FUNC_TEST=TRUE

6 TPS

6 TPS

8 TPS

PAGE TITLE
FCT

Apple Inc.

DRAWING NUMBER 051-05309
SIZE D
REVISION 6.0.0
BRANCH pvt
PAGE 124 OF 500
SHEET 83 OF 98

NOTICE OF PROPRIETARY PROPERTY:
THE INFORMATION CONTAINED HEREIN IS THE PROPRIETARY PROPERTY OF APPLE INC.
THE POSESSOR AGREES TO THE FOLLOWING:
I TO MAINTAIN THIS DOCUMENT IN CONFIDENCE
II NOT TO REPRODUCE OR COPY IT
III NOT TO REVEAL OR PUBLISH IT IN WHOLE OR PART
IV ALL RIGHTS RESERVED

8	7	6	5	4	3	2	1

SAR Fusion Sensor Debug

43 35	SPI ACCEL CS L	P2MM SM 1 PP	PPC561
43 35	SPI AOP SENSOR MISO	P2MM SM 1 PP	PPC564
43 35	ACCEL INT1	P2MM SM 1 PP	PPC565

PMIC Switch Nodes

70	PVDDCPUAWAKE SW0	P2MM SM 1 PP	PPC509
70	PVDDCPUAWAKE SW1	P2MM SM 1 PP	PPC512
70	PVDDCPUAWAKE SW2	P2MM SM 1 PP	PPC513
70	PVDDCPUAWAKE SW3	P2MM SM 1 PP	PPC514
70	PVDDCPUSRAMAWAKE SW0	P2MM SM 1 PP	PPC515
70	P0V8SLPDDR SW0	P2MM SM 1 PP	PPC516
70	P0V8SLPDDR SW1	P2MM SM 1 PP	PPC517
70	P1V8SLPS2R SW0	P2MM SM 1 PP	PPC518
70	P1V1SLPS2R SW0	P2MM SM 1 PP	PPC521
70	P1V1SLPS2R SW1	P2MM SM 1 PP	PPC522
70	P0V9SLPDDR SW0	P2MM SM 1 PP	PPC523
70	P0V9SLPDDR SW1	P2MM SM 1 PP	PPC524
70	PVPCORES5 SW0	P2MM SM 1 PP	PPC527
70	PVPCORES5 SW1	P2MM SM 1 PP	PPC525
70	P1VPRIM SW1	P2MM SM 1 PP	PPC528

76 36	MIPI FTCAM DATA P<0>	P5MM-SP SM-SP 1 PP	PPC549
76 36	MIPI FTCAM DATA N<0>	P5MM-SP SM-SP 1 PP	PPC550
76 36	MIPI FTCAM CLK P	P2MM SM 1 PP	PPC551
76 36	MIPI FTCAM CLK N	P2MM SM 1 PP	PPC552

77 37	PCIE SSD0 D2R N<0>	P2MM SM 1 PP	PPC510
77 37	PCIE SSD0 D2R P<0>	P2MM SM 1 PP	PPC511

37 14	PCIE CLK100M SOC N	P2MM SM 1 PP	PPC539
37 14	PCIE CLK100M SOC P	P2MM SM 1 PP	PPC540
78 77 37	PCIE CLK100M SSD0 01 N	P2MM SM 1 PP	PPC541
78 77 37	PCIE CLK100M SSD0 01 P	P2MM SM 1 PP	PPC542
80 79 37	PCIE CLK100M SSD0 23 N	P2MM SM 1 PP	PPC553
80 79 37	PCIE CLK100M SSD0 23 P	P2MM SM 1 PP	PPC554
25 14	PCIE CLK100M TBT X N	P2MM SM 1 PP	PPC543
25 14	PCIE CLK100M TBT X P	P2MM SM 1 PP	PPC544

SOC SENSE

72 38	SOC VDDCPU SENSE	P2MM SM 1 PP	PPC530

ACE-TR AUX/LS

28 25	USBC XA AUXLSX1	P2MM SM 1 PP	PPC570
28 25	USBC XA AUXLSX2	P2MM SM 1 PP	PPC571
29 25	USBC XB AUXLSX1	P2MM SM 1 PP	PPC572
29 25	USBC XB AUXLSX2	P2MM SM 1 PP	PPC573

ACE GPIO PPs

28 27	UPC XA SER DBG	P2MM SM 1 PP	PPC578
29 27	UPC XB SER DBG	P2MM SM 1 PP	PPC579

5	XDP BPM L<0>	TPC520 A TP-P5	

PAGE TITLE

PROBE POINTS

Apple Inc.

DRAWING NUMBER	051-05309
SIZE	D
REVISION	6.0.0
BRANCH	pvt
PAGE	125 OF 500
SHEET	84 OF 98

NOTICE OF PROPRIETARY PROPERTY:
THE INFORMATION CONTAINED HEREIN IS THE PROPRIETARY PROPERTY OF APPLE INC.
THE POSESSOR AGREES TO THE FOLLOWING:
I TO MAINTAIN THIS DOCUMENT IN CONFIDENCE
II NOT TO REPRODUCE OR COPY IT
III NOT TO REVEAL OR PUBLISH IT IN WHOLE OR PART
IV ALL RIGHTS RESERVED

8	7	6	5	4	3	2	1

KEYBOARD CONNECTOR 5V

83 75 52 PP5V_G3S_KBD

CD500 12PF 5% 25V NP0-C0G 0201

TRACKPAD SPI CLK

83 62 SPI_TPAD_3V3_CLK

CD510 12PF 5% 25V NP0-C0G 0201

EOPIO EDRAM VR HIGH SIDE

87 73 69 67 66 65 49 43 PPBUS_HS_CPU

CD520 12PF 5% 25V NP0-C0G 0201

CD521 3.0PF +/-0.1PF 25V NP0-C0G 0201

NAND VCC

85 83 82 81 80 79 78 77 PP2V5_NAND_SSD0

CD550 12PF 5% 25V NP0-C0G 0201

CD551 3.0PF +/-0.1PF 25V NP0-C0G 0201

CALPE BUCK 9

85 83 82 81 80 79 78 77 70 PP0V9_SSD0

CD532 12PF 5% 25V NP0-C0G 0201

CD533 3.0PF +/-0.1PF 25V NP0-C0G 0201

CALPE BUCK 10

85 83 82 81 80 79 78 77 70 PPVCCQ_ANI_SSD0

CD542 12PF 5% 25V NP0-C0G 0201

CD543 3.0PF +/-0.1PF 25V NP0-C0G 0201

S4E

81 49 PPBUS_G3H_SSD0

CD5N0 12PF 5% 25V NP0-C0G 0201

CD5N1 3.0PF +/-0.1PF 25V NP0-C0G 0201

OCARINA VDD

85 83 82 81 80 79 78 77 70 PP0V9_SSD0

CD530 12PF 5% 25V NP0-C0G 0201

CD531 3.0PF +/-0.1PF 25V NP0-C0G 0201

OCARINA VDDIO2

85 83 82 81 80 79 78 77 70 PPVCCQ_ANI_SSD0

CD540 12PF 5% 25V NP0-C0G 0201

CD541 3.0PF +/-0.1PF 25V NP0-C0G 0201

CD545 12PF 5% 25V NP0-C0G 0201

CD546 3.0PF +/-0.1PF 25V NP0-C0G 0201

S4E U8600 VDD

85 83 82 81 80 79 78 77 70 PP0V9_SSD0

CD560 12PF 5% 25V NP0-C0G 0201

CD561 12PF 5% 25V NP0-C0G 0201

CD562 3.0PF +/-0.1PF 25V NP0-C0G 0201

CD563 3.0PF +/-0.1PF 25V NP0-C0G 0201

CD564 12PF 5% 25V NP0-C0G 0201

CD565 3.0PF +/-0.1PF 25V NP0-C0G 0201

S4E U8600 VCC

85 83 82 81 80 79 78 77 PP2V5_NAND_SSD0

CD570 12PF 5% 25V NP0-C0G 0201

CD571 12PF 5% 25V NP0-C0G 0201

CD572 3.0PF +/-0.1PF 25V NP0-C0G 0201

CD573 3.0PF +/-0.1PF 25V NP0-C0G 0201

S4E U8600 VDDIO1

85 83 81 80 79 78 77 PP1V8_IO_SSD0

CD580 12PF 5% 25V NP0-C0G 0201

CD582 3.0PF +/-0.1PF 25V NP0-C0G 0201

S4E U8600 VDDIO2

85 83 82 81 80 79 78 77 70 PPVCCQ_ANI_SSD0

CD590 12PF 5% 25V NP0-C0G 0201

CD591 12PF 5% 25V NP0-C0G 0201

CD592 3.0PF +/-0.1PF 25V NP0-C0G 0201

CD593 3.0PF +/-0.1PF 25V NP0-C0G 0201

S4E U8700 VDD

85 83 82 81 80 79 78 77 70 PP0V9_SSD0

CD5A0 12PF 5% 25V NP0-C0G 0201

CD5A1 12PF 5% 25V NP0-C0G 0201

CD5A2 3.0PF +/-0.1PF 25V NP0-C0G 0201

CD5A3 3.0PF +/-0.1PF 25V NP0-C0G 0201

CD5A4 12PF 5% 25V NP0-C0G 0201

CD5A5 3.0PF +/-0.1PF 25V NP0-C0G 0201

S4E U8700 VCC

85 83 82 81 80 79 78 77 PP2V5_NAND_SSD0

CD5B0 12PF 5% 25V NP0-C0G 0201

CD5B1 12PF 5% 25V NP0-C0G 0201

CD5B2 3.0PF +/-0.1PF 25V NP0-C0G 0201

CD5B3 3.0PF +/-0.1PF 25V NP0-C0G 0201

S4E U8700 VDDIO1

85 83 81 80 79 78 77 PP1V8_IO_SSD0

CD5C0 12PF 5% 25V NP0-C0G 0201

CD5C2 3.0PF +/-0.1PF 25V NP0-C0G 0201

S4E U8700 VDDIO2

85 83 82 81 80 79 78 77 70 PPVCCQ_ANI_SSD0

CD5D0 12PF 5% 25V NP0-C0G 0201

CD5D2 3.0PF +/-0.1PF 25V NP0-C0G 0201

S4E U8800 VDD

85 83 82 81 80 79 78 77 70 PP0V9_SSD0

CD5E0 12PF 5% 25V NP0-C0G 0201

CD5E1 12PF 5% 25V NP0-C0G 0201

CD5E2 3.0PF +/-0.1PF 25V NP0-C0G 0201

CD5E3 3.0PF +/-0.1PF 25V NP0-C0G 0201

CD5E4 12PF 5% 25V NP0-C0G 0201

CD5E5 3.0PF +/-0.1PF 25V NP0-C0G 0201

S4E U8800 VCC

85 83 82 81 80 79 78 77 PP2V5_NAND_SSD0

CD5F0 12PF 5% 25V NP0-C0G 0201

CD5F1 12PF 5% 25V NP0-C0G 0201

CD5F2 3.0PF +/-0.1PF 25V NP0-C0G 0201

CD5F3 3.0PF +/-0.1PF 25V NP0-C0G 0201

S4E U8800 VDDIO1

85 83 81 80 79 78 77 PP1V8_IO_SSD0

CD5G0 12PF 5% 25V NP0-C0G 0201

CD5G2 3.0PF +/-0.1PF 25V NP0-C0G 0201

S4E U8800 VDDIO2

85 83 82 81 80 79 78 77 70 PPVCCQ_ANI_SSD0

CD5H0 12PF 5% 25V NP0-C0G 0201

CD5H2 3.0PF +/-0.1PF 25V NP0-C0G 0201

S4E U8900 VDD

85 83 82 81 80 79 78 77 70 PP0V9_SSD0

CD5J0 12PF 5% 25V NP0-C0G 0201

CD5J1 12PF 5% 25V NP0-C0G 0201

CD5J2 3.0PF +/-0.1PF 25V NP0-C0G 0201

CD5J3 3.0PF +/-0.1PF 25V NP0-C0G 0201

S4E U8900 VCC

85 83 82 81 80 79 78 77 PP2V5_NAND_SSD0

CD5K0 12PF 5% 25V NP0-C0G 0201

CD5K1 12PF 5% 25V NP0-C0G 0201

CD5K2 3.0PF +/-0.1PF 25V NP0-C0G 0201

CD5K3 3.0PF +/-0.1PF 25V NP0-C0G 0201

S4E U8900 VDDIO1

85 83 81 80 79 78 77 PP1V8_IO_SSD0

CD5L0 12PF 5% 25V NP0-C0G 0201

CD5L2 3.0PF +/-0.1PF 25V NP0-C0G 0201

S4E U8900 VDDIO2

85 83 82 81 80 79 78 77 70 PPVCCQ_ANI_SSD0

CD5M0 12PF 5% 25V NP0-C0G 0201

CD5M2 3.0PF +/-0.1PF 25V NP0-C0G 0201

83 82 81 72 35 34 PMU_SYS_ALIVE

CD5DP0 100PF 5% 25V C0G 0201

83 72 60 35 PMU_COLD_RESET_L

CD5DP1 100PF 5% 25V C0G 0201

83 72 35 SOC_WDOG

CD5DP2 100PF 5% 25V C0G 0201

83 72 17 5 PM_THRMTRIP_L

CD5DP3 100PF 5% 25V C0G 0201

83 72 34 SOC_SOCHOT_L

CD5DP4 100PF 5% 25V C0G 0201

35 15 SOC_PERST_L

CD5DP5 100PF 5% 25V C0G 0201

83 72 63 29 28 UPC_PMU_RESET

CD5DP6 100PF 5% 25V C0G 0201

BOM_COST_GROUP=DESENSE

SYNC_MASTER= SYNC_DATE=

PAGE TITLE

DESENSE 1

Apple Inc.

DRAWING NUMBER	051-05309
SIZE	D
REVISION	6.0.0
BRANCH	pvt
PAGE	135 OF 500
SHEET	85 OF 98

NOTICE OF PROPRIETARY PROPERTY:

THE INFORMATION CONTAINED HEREIN IS THE PROPRIETARY PROPERTY OF APPLE INC.
THE POSESSOR AGREES TO THE FOLLOWING:
I TO MAINTAIN THIS DOCUMENT IN CONFIDENCE
II NOT TO REPRODUCE OR COPY IT
III NOT TO REVEAL OR PUBLISH IT IN WHOLE OR PART
IV ALL RIGHTS RESERVED

CALPE VDD MAIN HIGH SIDE INPUT

71 70 52 PP3V3_G3H_PMU_VDDMAIN

CD670 12PF 5% 25V NP0-C0G 0201	CD671 12PF 5% 25V NP0-C0G 0201	CD672 12PF 5% 25V NP0-C0G 0201	CD673 12PF 5% 25V NP0-C0G 0201	CD674 12PF 5% 25V NP0-C0G 0201	CD675 12PF 5% 25V NP0-C0G 0201	CD676 12PF 5% 25V NP0-C0G 0201	CD677 12PF 5% 25V NP0-C0G 0201	CD678 12PF 5% 25V NP0-C0G 0201	CD679 12PF 5% 25V NP0-C0G 0201
CD6G0 3.0PF +/-0.1PF 25V NP0-C0G 0201	CD6G1 3.0PF +/-0.1PF 25V NP0-C0G 0201	CD6G2 3.0PF +/-0.1PF 25V NP0-C0G 0201	CD6G3 3.0PF +/-0.1PF 25V NP0-C0G 0201	CD6G4 3.0PF +/-0.1PF 25V NP0-C0G 0201	CD6G5 3.0PF +/-0.1PF 25V NP0-C0G 0201	CD6G6 3.0PF +/-0.1PF 25V NP0-C0G 0201	CD6G7 3.0PF +/-0.1PF 25V NP0-C0G 0201	CD6G8 3.0PF +/-0.1PF 25V NP0-C0G 0201	CD6G9 3.0PF +/-0.1PF 25V NP0-C0G 0201

VR 5V G3S

75 68 55 54 52 51 50 46 29 28 83 PP5V_G3S

CD620 12PF 5% 25V NP0-C0G 0201	CD621 12PF 5% 25V NP0-C0G 0201	CD622 12PF 5% 25V NP0-C0G 0201
CD623 3.0PF +/-0.1PF 25V NP0-C0G 0201	CD624 3.0PF +/-0.1PF 25V NP0-C0G 0201	CD625 3.0PF +/-0.1PF 25V NP0-C0G 0201

VR 3V3 G3H

3.3
83 74 68 63 54 52 PP3V3_G3H

CD630 12PF 5% 25V NP0-C0G 0201	CD631 12PF 5% 25V NP0-C0G 0201	CD632 12PF 5% 25V NP0-C0G 0201
CD633 3.0PF +/-0.1PF 25V NP0-C0G 0201	CD634 3.0PF +/-0.1PF 25V NP0-C0G 0201	CD635 3.0PF +/-0.1PF 25V NP0-C0G 0201

VR 3V3 G3H HIGH SIDE

68 49 PPVIN_G3H_P3V3G3H

CD640 12PF 5% 25V NP0-C0G 0201	CD641 3.0PF +/-0.1PF 25V NP0-C0G 0201

VR 5V G3S HIGH SIDE

68 49 PPVIN_G3H_P5VG3S

CD650 12PF 5% 25V NP0-C0G 0201	CD651 3.0PF +/-0.1PF 25V NP0-C0G 0201

BATTERY CONNECTOR SYS DETECT

83 63 SYS_DETECT_L

CD660 12PF 5% 25V NP0-C0G 0201	CD661 3.0PF +/-0.1PF 25V NP0-C0G 0201

VR 5V ALS

83 76 74 73 69 67 66 65 51 PP5V_G3S_CPUREG_MISC

CD6R1 12PF 5% 25V NP0-C0G 0201	CD6R2 3.0PF +/-0.1PF 25V NP0-C0G 0201

CALPE PCH 1V1 PRIM

83 73 70 54 16 11 7 PP1V_PRIM

CD680 12PF 5% 25V NP0-C0G 0201	CD681 12PF 5% 25V NP0-C0G 0201

CALPE 0V82 SLPDDR

83 70 43 38 PP0V82_SLPDDR

CD690 12PF 5% 25V NP0-C0G 0201	CD691 12PF 5% 25V NP0-C0G 0201

CALPE CPU AWAKE

83 70 43 38 PPVDDCPU_AWAKE

CD6A0 12PF 5% 25V NP0-C0G 0201	CD6A1 3.0PF +/-0.1PF 25V NP0-C0G 0201

CALPE CPU SRAM AWAKE

83 70 38 PPVDDCPUSRAM_AWAKE

CD6B0 12PF 5% 25V NP0-C0G 0201	CD6B1 3.0PF +/-0.1PF 25V NP0-C0G 0201

CALPE 1V8 SLPS2R

60 47 44 43 42 40 34 29 28 27 89 83 81 74 72 71 70 64 63 PP1V8_SLPS2R

CD6C0 12PF 5% 25V NP0-C0G 0201	CD6C1 3.0PF +/-0.1PF 25V NP0-C0G 0201

CALPE 1V1 SLPS2R

83 71 70 40 39 PP1V1_SLPS2R

CD6D0 12PF 5% 25V NP0-C0G 0201	CD6D1 3.0PF +/-0.1PF 25V NP0-C0G 0201

CALPE 0V9 SLPDDR

83 70 43 39 PP0V9_SLPDDR

CD6E0 12PF 5% 25V NP0-C0G 0201	CD6E1 3.0PF +/-0.1PF 25V NP0-C0G 0201

CALPE PCH VCORE

83 70 54 11 7 PPVPCORE_S5

CD6F0 12PF 5% 25V NP0-C0G 0201	CD6F1 3.0PF +/-0.1PF 25V NP0-C0G 0201

LCD BACKLIGHT DRIVER VOUT

83 75 PPVOUT_S0_LCDBKLT_F

CD600 3PF +/-0.1PF 100V C0G 0201	CD601 3PF +/-0.1PF 100V C0G 0201

83 76 75 PPVOUT_S0_LCDBKLT

CD6J0 3PF +/-0.1PF 100V C0G 0201	CD6J1 3PF +/-0.1PF 100V C0G 0201

EDRAM

83 69 9 7 PPVCCEDRAM_S0_CPU

CD6L0 12PF 5% 25V NP0-C0G 0201	CD6L1 3.0PF +/-0.1PF 25V NP0-C0G 0201	CD6L2 12PF 5% 25V NP0-C0G 0201	CD6L3 3.0PF +/-0.1PF 25V NP0-C0G 0201

72 71 63 61 57 54 50 29 28 27 89 83 76 74 PP3V3_G3H_RTC

CD6M0 12PF 5% 25V NP0-C0G 0201	CD6M1 3.0PF +/-0.1PF 25V NP0-C0G 0201

63 PPVIN_G3H_P3V3G3HRTC_R

CD6N0 12PF 5% 25V NP0-C0G 0201	CD6N1 3.0PF +/-0.1PF 25V NP0-C0G 0201

87 83 75 72 64 62 49 PPBUS_G3H

CD6P2 12PF 5% 25V NP0-C0G 0201	CD6P0 12PF 5% 25V NP0-C0G 0201	CD6P1 3.0PF +/-0.1PF 25V NP0-C0G 0201

83 75 PPVOUT_S0_KBDLED

CD6S0 12PF 5% 100V C0G 0201	CD6S1 12PF 5% 100V C0G 0201	CD6S2 12PF 5% 100V C0G 0201	CD6S3 12PF 5% 100V C0G 0201

BOM_COST_GROUP=DESENSE

SYNC_MASTER= SYNC_DATE=

PAGE TITLE
DESENSE 2

Apple Inc.

DRAWING NUMBER 051-05309
SIZE D
REVISION 6.0.0
BRANCH pvt
PAGE 136 OF 500
SHEET 86 OF 98

NOTICE OF PROPRIETARY PROPERTY:
THE INFORMATION CONTAINED HEREIN IS THE PROPRIETARY PROPERTY OF APPLE INC.
THE POSESSOR AGREES TO THE FOLLOWING:
I TO MAINTAIN THIS DOCUMENT IN CONFIDENCE
II NOT TO REPRODUCE OR COPY IT
III NOT TO REVEAL OR PUBLISH IT IN WHOLE OR PART
IV ALL RIGHTS RESERVED

3V3 G3H RTC VR HIGH SIDE

63 49 PPVIN_G3H_P3V3G3HRTC
- CD700 12PF 5% 25V NP0-C0G 0201
- CD701 3.0PF +/-0.1PF 25V NP0-C0G 0201

3V3 G3H RTC VR

63 PP3V3_G3H_RTC_REG_R
- CD710 12PF 5% 25V NP0-C0G 0201
- CD711 3.0PF +/-0.1PF 25V NP0-C0G 0201

DCIN CHARGER

83 64 49 27 PPDCIN_G3H
- CD720 12PF 5% 25V NP0-C0G 0201
- CD721 3.0PF +/-0.1PF 25V NP0-C0G 0201

DCIN XA ACE2

28 27 PPDCIN_XA_G3H_F
- CD730 12PF 5% 25V NP0-C0G 0201
- CD731 3.0PF +/-0.1PF 25V NP0-C0G 0201

DCIN XB ACE2

29 27 PPDCIN_XB_G3H_F
- CD740 12PF 5% 25V NP0-C0G 0201
- CD741 3.0PF +/-0.1PF 25V NP0-C0G 0201

PBUS CHARGER

87 86 83 75 72 64 62 49 PPBUS_G3H
- CD750 12PF 5% 25V NP0-C0G 0201
- CD751 3.0PF +/-0.1PF 25V NP0-C0G 0201

PBUS CPU HIGH SIDE SENSOR

87 86 83 75 72 64 62 49 PPBUS_G3H
- CD760 12PF 5% 25V NP0-C0G 0201
- CD761 3.0PF +/-0.1PF 25V NP0-C0G 0201

PBUS RIGHT AMP SENSOR

87 86 83 75 72 64 62 49 PPBUS_G3H
- CD770 12PF 5% 25V NP0-C0G 0201
- CD771 3.0PF +/-0.1PF 25V NP0-C0G 0201

PBUS LEFT AMP SENSOR

87 86 83 75 72 64 62 49 PPBUS_G3H
- CD7K0 12PF 5% 25V NP0-C0G 0201
- CD7K1 3.0PF +/-0.1PF 25V NP0-C0G 0201

PBUS TRACKPAD

87 86 83 75 72 64 62 49 PPBUS_G3H
- CD7M0 12PF 5% 25V NP0-C0G 0201
- CD7M1 3.0PF +/-0.1PF 25V NP0-C0G 0201

5V G3S TRACKPAD

62 54 PP5V_G3S_TPAD
- CD7L0 12PF 5% 25V NP0-C0G 0201
- CD7L1 3.0PF +/-0.1PF 25V NP0-C0G 0201

CPU CORE VR LOAD SIDE

83 66 50 9 7 PPVCC_S0_CPU
- CD7B0 12PF 5% 25V NP0-C0G 0201
- CD7B1 12PF 5% 25V NP0-C0G 0201
- CD7B2 12PF 5% 25V NP0-C0G 0201
- CD7B3 12PF 5% 25V NP0-C0G 0201
- CD7B4 12PF 5% 25V NP0-C0G 0201
- CD7B5 12PF 5% 25V NP0-C0G 0201
- CD7B6 12PF 5% 25V NP0-C0G 0201
- CD7J0 3.0PF +/-0.1PF 25V NP0-C0G 0201
- CD7J1 3.0PF +/-0.1PF 25V NP0-C0G 0201
- CD7J2 3.0PF +/-0.1PF 25V NP0-C0G 0201
- CD7J3 3.0PF +/-0.1PF 25V NP0-C0G 0201
- CD7J4 3.0PF +/-0.1PF 25V NP0-C0G 0201
- CD7J5 3.0PF +/-0.1PF 25V NP0-C0G 0201
- CD7J6 3.0PF +/-0.1PF 25V NP0-C0G 0201

CPU VCCSA LOAD SIDE

83 66 52 9 7 PPVCCSA_S0_CPU
- CD7C0 12PF 5% 25V NP0-C0G 0201
- CD7C2 12PF 5% 25V NP0-C0G 0201
- CD7C3 12PF 5% 25V NP0-C0G 0201
- CD7C1 3.0PF +/-0.1PF 25V NP0-C0G 0201
- CD7C4 3.0PF +/-0.1PF 25V NP0-C0G 0201
- CD7C5 3.0PF +/-0.1PF 25V NP0-C0G 0201

CPU VCCGT LOAD SIDE

83 67 50 10 7 PPVCCGT_S0_CPU
- CD7D0 12PF 5% 25V NP0-C0G 0201
- CD7D1 12PF 5% 25V NP0-C0G 0201
- CD7D2 12PF 5% 25V NP0-C0G 0201
- CD7D3 12PF 5% 25V NP0-C0G 0201
- CD7D4 12PF 5% 25V NP0-C0G 0201
- CD7D5 12PF 5% 25V NP0-C0G 0201
- CD7D8 12PF 5% 25V NP0-C0G 0201
- CD7V0 3.0PF +/-0.1PF 25V NP0-C0G 0201
- CD7V1 3.0PF +/-0.1PF 25V NP0-C0G 0201
- CD7V2 3.0PF +/-0.1PF 25V NP0-C0G 0201
- CD7V3 3.0PF +/-0.1PF 25V NP0-C0G 0201
- CD7V4 3.0PF +/-0.1PF 25V NP0-C0G 0201
- CD7V5 3.0PF +/-0.1PF 25V NP0-C0G 0201
- CD7V8 3.0PF +/-0.1PF 25V NP0-C0G 0201

CPU VCCIO LOAD SIDE

83 73 9 7 4 PPVCCIO_S0_CPU
- CD780 12PF 5% 25V NP0-C0G 0201
- CD781 3.0PF +/-0.1PF 25V NP0-C0G 0201

VBUS XB

83 30 29 PP20V_USBC_XB_VBUS
- CD7E0 12PF 5% 25V NP0-C0G 0201
- CD7E1 12PF 5% 25V NP0-C0G 0201
- CD7E2 12PF 5% 25V NP0-C0G 0201
- CD7E3 12PF 5% 25V NP0-C0G 0201
- CD7E4 3.0PF +/-0.1PF 25V NP0-C0G 0201
- CD7E5 3.0PF +/-0.1PF 25V NP0-C0G 0201

VBUS XA

83 30 28 27 PP20V_USBC_XA_VBUS
- CD7F0 12PF 5% 25V NP0-C0G 0201
- CD7F4 3.0PF +/-0.1PF 25V NP0-C0G 0201

DFR 1V8 VR

83 48 46 PP1V8_DFR
- CD790 3.0PF +/-0.1PF 25V NP0-C0G 0201
- CD791 3.0PF +/-0.1PF 25V NP0-C0G 0201

CPU CORE/VCCSA/GT VR HIGH SIDE

85 73 69 67 66 65 49 43 PPBUS_HS_CPU
- CD7A0 12PF 5% 25V NP0-C0G 0201
- CD7A1 12PF 5% 25V NP0-C0G 0201
- CD7A2 12PF 5% 25V NP0-C0G 0201
- CD7A3 12PF 5% 25V NP0-C0G 0201
- CD7A4 12PF 5% 25V NP0-C0G 0201
- CD7A5 12PF 5% 25V NP0-C0G 0201
- CD7A6 12PF 5% 25V NP0-C0G 0201
- CD7A7 12PF 5% 25V NP0-C0G 0201
- CD7A8 12PF 5% 25V NP0-C0G 0201
- CD7A9 12PF 5% 25V NP0-C0G 0201
- CD7G1 12PF 5% 25V NP0-C0G 0201
- CD7G2 12PF 5% 25V NP0-C0G 0201
- CD7G3 12PF 5% 25V NP0-C0G 0201
- CD7G4 12PF 5% 25V NP0-C0G 0201
- CD7G5 12PF 5% 25V NP0-C0G 0201
- CD7H0 3.0PF +/-0.1PF 25V NP0-C0G 0201
- CD7H1 3.0PF +/-0.1PF 25V NP0-C0G 0201
- CD7H2 3.0PF +/-0.1PF 25V NP0-C0G 0201
- CD7H3 3.0PF +/-0.1PF 25V NP0-C0G 0201
- CD7H4 3.0PF +/-0.1PF 25V NP0-C0G 0201
- CD7H5 3.0PF +/-0.1PF 25V NP0-C0G 0201
- CD7H6 3.0PF +/-0.1PF 25V NP0-C0G 0201
- CD7H7 3.0PF +/-0.1PF 25V NP0-C0G 0201
- CD7H8 3.0PF +/-0.1PF 25V NP0-C0G 0201
- CD7H9 3.0PF +/-0.1PF 25V NP0-C0G 0201
- CD7I1 3.0PF +/-0.1PF 25V NP0-C0G 0201
- CD7I2 3.0PF +/-0.1PF 25V NP0-C0G 0201
- CD7I3 3.0PF +/-0.1PF 25V NP0-C0G 0201
- CD7I4 3.0PF +/-0.1PF 25V NP0-C0G 0201
- CD7I5 3.0PF +/-0.1PF 25V NP0-C0G 0201

BOM_COST_GROUP=DESENSE

SYNC_MASTER= SYNC_DATE=

PAGE TITLE: DESENSE 3

Apple Inc.

DRAWING NUMBER: 051-05309 SIZE: D

REVISION: 6.0.0

BRANCH: pvt

PAGE: 137 OF 500

SHEET: 87 OF 98

NOTICE OF PROPRIETARY PROPERTY:
THE INFORMATION CONTAINED HEREIN IS THE PROPRIETARY PROPERTY OF APPLE INC.
THE POSESSOR AGREES TO THE FOLLOWING:
I TO MAINTAIN THIS DOCUMENT IN CONFIDENCE
II NOT TO REPRODUCE OR COPY IT
III NOT TO REVEAL OR PUBLISH IT IN WHOLE OR PART
IV ALL RIGHTS RESERVED

MEM 1V2 LOAD SIDE

73 50 23 22 21 20 19 83 74 PP1V2_S3

CD800 12PF 5% 25V NP0-C0G 0201	CD801 12PF 5% 25V NP0-C0G 0201	CD802 12PF 5% 25V NP0-C0G 0201	CD803 12PF 5% 25V NP0-C0G 0201	CD804 12PF 5% 25V NP0-C0G 0201	CD805 12PF 5% 25V NP0-C0G 0201	CD806 12PF 5% 25V NP0-C0G 0201	CD807 12PF 5% 25V NP0-C0G 0201
CD808 12PF 5% 25V NP0-C0G 0201	CD809 12PF 5% 25V NP0-C0G 0201	CD810 12PF 5% 25V NP0-C0G 0201	CD811 12PF 5% 25V NP0-C0G 0201	CD812 12PF 5% 25V NP0-C0G 0201	CD813 12PF 5% 25V NP0-C0G 0201	CD814 12PF 5% 25V NP0-C0G 0201	CD815 12PF 5% 25V NP0-C0G 0201
CD816 12PF 5% 25V NP0-C0G 0201	CD817 12PF 5% 25V NP0-C0G 0201	CD818 12PF 5% 25V NP0-C0G 0201	CD819 12PF 5% 25V NP0-C0G 0201	CD820 12PF 5% 25V NP0-C0G 0201	CD821 12PF 5% 25V NP0-C0G 0201	CD822 12PF 5% 25V NP0-C0G 0201	CD823 12PF 5% 25V NP0-C0G 0201
CD824 12PF 5% 25V NP0-C0G 0201	CD825 12PF 5% 25V NP0-C0G 0201		CD827 12PF 5% 25V NP0-C0G 0201	CD828 12PF 5% 25V NP0-C0G 0201			
CD832 3.0PF +/-0.1PF 25V NP0-C0G 0201	CD833 3.0PF +/-0.1PF 25V NP0-C0G 0201	CD834 3.0PF +/-0.1PF 25V NP0-C0G 0201	CD835 3.0PF +/-0.1PF 25V NP0-C0G 0201	CD836 3.0PF +/-0.1PF 25V NP0-C0G 0201	CD837 3.0PF +/-0.1PF 25V NP0-C0G 0201	CD838 3.0PF +/-0.1PF 25V NP0-C0G 0201	CD839 3.0PF +/-0.1PF 25V NP0-C0G 0201
CD840 3.0PF +/-0.1PF 25V NP0-C0G 0201	CD841 3.0PF +/-0.1PF 25V NP0-C0G 0201	CD842 3.0PF +/-0.1PF 25V NP0-C0G 0201	CD843 3.0PF +/-0.1PF 25V NP0-C0G 0201	CD844 3.0PF +/-0.1PF 25V NP0-C0G 0201	CD845 3.0PF +/-0.1PF 25V NP0-C0G 0201	CD846 3.0PF +/-0.1PF 25V NP0-C0G 0201	CD847 3.0PF +/-0.1PF 25V NP0-C0G 0201
CD848 3.0PF +/-0.1PF 25V NP0-C0G 0201	CD849 3.0PF +/-0.1PF 25V NP0-C0G 0201	CD850 3.0PF +/-0.1PF 25V NP0-C0G 0201	CD851 3.0PF +/-0.1PF 25V NP0-C0G 0201	CD852 3.0PF +/-0.1PF 25V NP0-C0G 0201	CD853 3.0PF +/-0.1PF 25V NP0-C0G 0201	CD854 3.0PF +/-0.1PF 25V NP0-C0G 0201	CD855 3.0PF +/-0.1PF 25V NP0-C0G 0201
CD856 3.0PF +/-0.1PF 25V NP0-C0G 0201	CD857 3.0PF +/-0.1PF 25V NP0-C0G 0201		CD859 3.0PF +/-0.1PF 25V NP0-C0G 0201	CD860 3.0PF +/-0.1PF 25V NP0-C0G 0201	CD861 3.0PF +/-0.1PF 25V NP0-C0G 0201	CD862 3.0PF +/-0.1PF 25V NP0-C0G 0201	CD863 3.0PF +/-0.1PF 25V NP0-C0G 0201
CD864 3.0PF +/-0.1PF 25V NP0-C0G 0201	CD865 3.0PF +/-0.1PF 25V NP0-C0G 0201	CD866 3.0PF +/-0.1PF 25V NP0-C0G 0201	CD867 3.0PF +/-0.1PF 25V NP0-C0G 0201				

MEM 1V8 LOAD SIDE

83 51 23 22 21 20 PP1V8_S3_MEM

CD870 12PF 5% 25V NP0-C0G 0201	CD871 12PF 5% 25V NP0-C0G 0201	CD872 12PF 5% 25V NP0-C0G 0201	CD873 12PF 5% 25V NP0-C0G 0201	CD874 12PF 5% 25V NP0-C0G 0201	CD875 12PF 5% 25V NP0-C0G 0201	CD876 12PF 5% 25V NP0-C0G 0201	CD877 12PF 5% 25V NP0-C0G 0201
CD880 3.0PF +/-0.1PF 25V NP0-C0G 0201	CD881 3.0PF +/-0.1PF 25V NP0-C0G 0201	CD882 3.0PF +/-0.1PF 25V NP0-C0G 0201	CD883 3.0PF +/-0.1PF 25V NP0-C0G 0201	CD884 3.0PF +/-0.1PF 25V NP0-C0G 0201	CD885 3.0PF +/-0.1PF 25V NP0-C0G 0201	CD886 3.0PF +/-0.1PF 25V NP0-C0G 0201	CD887 3.0PF +/-0.1PF 25V NP0-C0G 0201

MEM 0V6 DDRVTT LOAD SIDE

83 73 24 PP0V6_S0_DDRVTT

CD890 12PF 5% 25V NP0-C0G 0201	CD891 12PF 5% 25V NP0-C0G 0201	CD892 12PF 5% 25V NP0-C0G 0201	CD893 12PF 5% 25V NP0-C0G 0201	CD894 12PF 5% 25V NP0-C0G 0201	CD895 12PF 5% 25V NP0-C0G 0201	CD896 12PF 5% 25V NP0-C0G 0201	CD897 12PF 5% 25V NP0-C0G 0201
CD8A0 3.0PF +/-0.1PF 25V NP0-C0G 0201	CD8A1 3.0PF +/-0.1PF 25V NP0-C0G 0201	CD8A2 3.0PF +/-0.1PF 25V NP0-C0G 0201	CD8A3 3.0PF +/-0.1PF 25V NP0-C0G 0201	CD8A4 3.0PF +/-0.1PF 25V NP0-C0G 0201	CD8A5 3.0PF +/-0.1PF 25V NP0-C0G 0201	CD8A6 3.0PF +/-0.1PF 25V NP0-C0G 0201	CD8A7 3.0PF +/-0.1PF 25V NP0-C0G 0201

CPU 1V2 LOAD SIDE

83 50 9 7 6 PP1V2_S3_CPUDDR

CD8B0 12PF 5% 25V NP0-C0G 0201	CD8B1 12PF 5% 25V NP0-C0G 0201	CD8B2 12PF 5% 25V NP0-C0G 0201	CD8B3 12PF 5% 25V NP0-C0G 0201
CD8C0 3.0PF +/-0.1PF 25V NP0-C0G 0201	CD8C1 3.0PF +/-0.1PF 25V NP0-C0G 0201	CD8C2 3.0PF +/-0.1PF 25V NP0-C0G 0201	CD8C3 3.0PF +/-0.1PF 25V NP0-C0G 0201

TBT X SVR

26 PP0V9_TBT_X_SVR

CD8H0 12PF 5% 25V NP0-C0G 0201	CD8H1 3.0PF +/-0.1PF 25V NP0-C0G 0201

TBT X S0

51 27 26 PP3V3_TBT_X_S0

CD8D0 12PF 5% 25V NP0-C0G 0201	CD8D1 12PF 5% 25V NP0-C0G 0201	CD8D2 3.0PF +/-0.1PF 25V NP0-C0G 0201	CD8D3 3.0PF +/-0.1PF 25V NP0-C0G 0201

EDP CONNECTOR 5V LCD

83 76 PP5V_S0SW_LCD

CD8E0 12PF 5% 25V NP0-C0G 0201	CD8E1 3.0PF +/-0.1PF 25V NP0-C0G 0201

EDP CONNECTOR 5V ALS

76 PP5V_G3S_ALSCAM

CD8F0 12PF 5% 25V NP0-C0G 0201	CD8F1 3.0PF +/-0.1PF 25V NP0-C0G 0201

EDP CONNECTOR 3V3 LCD

83 76 47 PP3V3_S0SW_LCD

CD8G0 12PF 5% 25V NP0-C0G 0201	CD8G1 3.0PF +/-0.1PF 25V NP0-C0G 0201

BOM_COST_GROUP=DESENSE

SYNC_MASTER= SYNC_DATE=

PAGE TITLE

DESENSE 4

Apple Inc.

DRAWING NUMBER 051-05309 SIZE D

REVISION 6.0.0

BRANCH pvt

PAGE 138 OF 500

SHEET 88 OF 98

NOTICE OF PROPRIETARY PROPERTY:
THE INFORMATION CONTAINED HEREIN IS THE PROPRIETARY PROPERTY OF APPLE INC.
THE POSESSOR AGREES TO THE FOLLOWING:
I TO MAINTAIN THIS DOCUMENT IN CONFIDENCE
II NOT TO REPRODUCE OR COPY IT
III NOT TO REVEAL OR PUBLISH IT IN WHOLE OR PART
IV ALL RIGHTS RESERVED

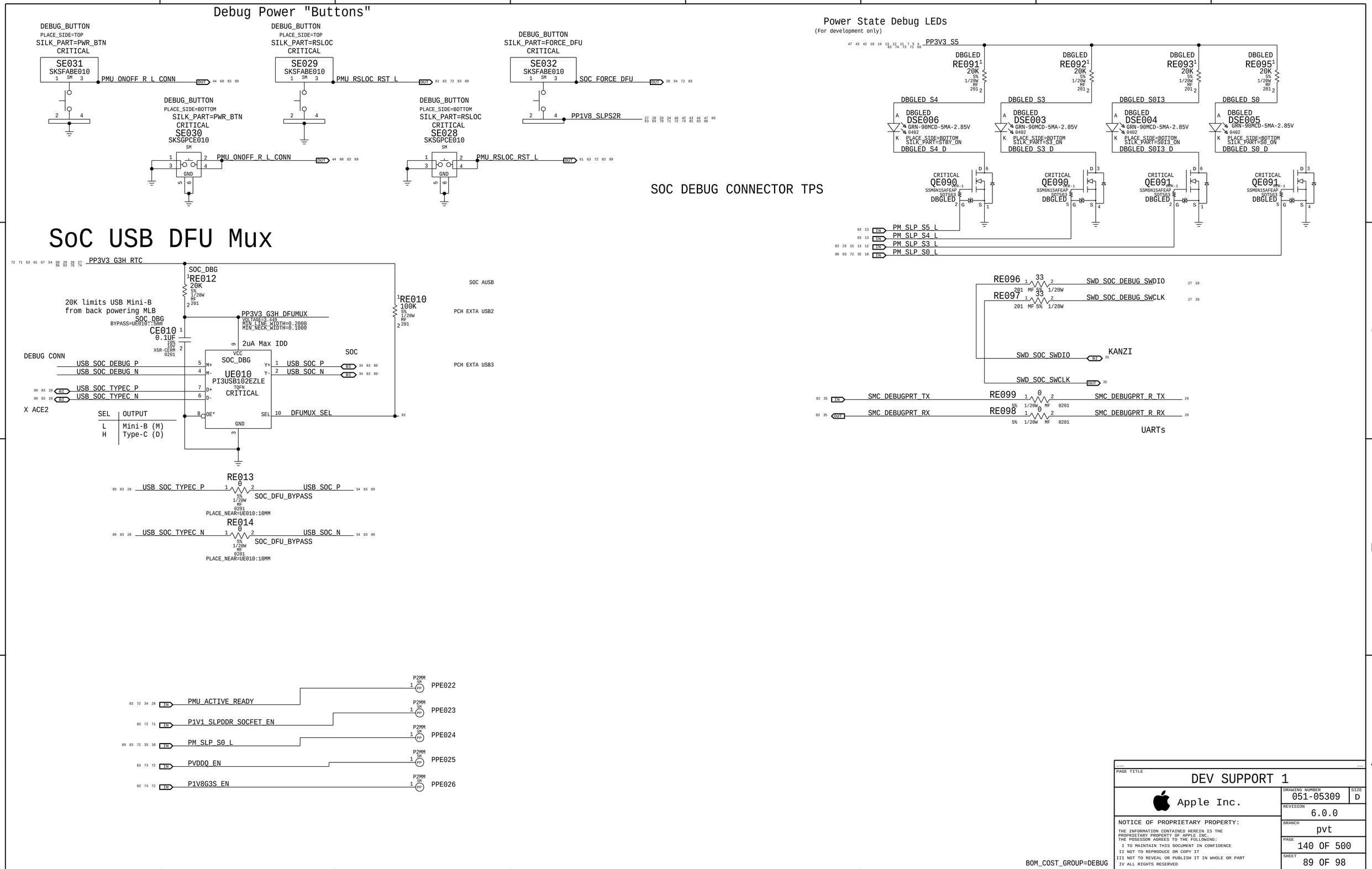
Debug Power "Buttons"
DEBUG_BUTTON
PLACE_SIDE=TOP
SILK_PART=PWR_BTN
CRITICAL
SE031
SKSFABE010
PMU_ONOFF_R_L_CONN
DEBUG_BUTTON
PLACE_SIDE=TOP
SILK_PART=RSLOC
CRITICAL
SE029
SKSFABE010
PMU_RSLOC_RST_L
DEBUG_BUTTON
SILK_PART=FORCE_DFU
CRITICAL
SE032
SKSFABE010
SOC_FORCE_DFU
PP1V8_SLPS2R
DEBUG_BUTTON
PLACE_SIDE=BOTTOM
SILK_PART=PWR_BTN
CRITICAL
SE030
SKSGPCE010
PMU_ONOFF_R_L_CONN
DEBUG_BUTTON
PLACE_SIDE=BOTTOM
SILK_PART=RSLOC
CRITICAL
SE028
SKSGPCE010
PMU_RSLOC_RST_L
SOC DEBUG CONNECTOR TPS
Power State Debug LEDs
(For development only)
PP3V3_S5
DBGLED
RE091
RE092
RE093
RE095
20K
DBGLED_S4
DBGLED_S3
DBGLED_S0I3
DBGLED_S0
DSE006
DSE003
DSE004
DSE005
GRN-90MCD-5MA-2.85V
0402
PLACE_SIDE=BOTTOM
SILK_PART=STBY_ON
SILK_PART=S3_ON
SILK_PART=S0I3_ON
SILK_PART=S0_ON
DBGLED_S4_D
DBGLED_S3_D
DBGLED_S0I3_D
DBGLED_S0_D
CRITICAL
QE090
QE091
SSM6N15AFEAP
SOT563
PM_SLP_S5_L
PM_SLP_S4_L
PM_SLP_S3_L
PM_SLP_S0_L
SoC USB DFU Mux
PP3V3_G3H_RTC
SOC_DBG
RE012
20K
20K limits USB Mini-B
from back powering MLB
SOC_DBG
BYPASS=UE010:5mm
CE010
0.1UF
PP3V3_G3H_DFUMUX
VOLTAGE=3.440
MIN_LINE_WIDTH=0.2000
MIN_NECK_WIDTH=0.1000
2uA Max IDD
RE010
100K
SOC AUSB
PCH EXTA USB2
PCH EXTA USB3
DEBUG CONN
USB_SOC_DEBUG_P
USB_SOC_DEBUG_N
USB_SOC_TYPEC_P
USB_SOC_TYPEC_N
X ACE2
SOC
UE010
PI3USB102EZLE
CRITICAL
USB_SOC_P
USB_SOC_N
DFUMUX_SEL
SEL | OUTPUT
L | Mini-B (M)
H | Type-C (D)
RE013
RE014
SOC_DFU_BYPASS
PLACE_NEAR=UE010:10MM
RE096
RE097
SWD_SOC_DEBUG_SWDIO
SWD_SOC_DEBUG_SWCLK
KANZI
SMC_DEBUGPRT_TX
SMC_DEBUGPRT_RX
RE099
RE098
UARTs
PMU_ACTIVE_READY
P1V1_SLPDDR_SOCFET_EN
PM_SLP_S0_L
PVDDQ_EN
P1V8G3S_EN
PPE022
PPE023
PPE024
PPE025
PPE026
BOM_COST_GROUP=DEBUG
PAGE TITLE
DEV SUPPORT 1
Apple Inc.
DRAWING NUMBER
051-05309
SIZE
D
REVISION
6.0.0
BRANCH
pvt
PAGE
140 OF 500
SHEET
89 OF 98
NOTICE OF PROPRIETARY PROPERTY:
THE INFORMATION CONTAINED HEREIN IS THE PROPRIETARY PROPERTY OF APPLE INC.
THE POSESSOR AGREES TO THE FOLLOWING:
I TO MAINTAIN THIS DOCUMENT IN CONFIDENCE
II NOT TO REPRODUCE OR COPY IT
III NOT TO REVEAL OR PUBLISH IT IN WHOLE OR PART
IV ALL RIGHTS RESERVED

UE020 SAK Truth Table:

INPUTS					OUTPUTS (OD)			
PMU_ACT_RDY	SLP_SCFET_EN	SLP_S0_L	VDDQ_EN	1V8G3S_EN	R	G	B	COLOR
0	0	0	0	0	BLINK	1	1	Blinking Red
0	0	0	0	1	0	1	1	Red
0	0	0	1	0	0	1	0	Magenta
0	0	0	1	1	0	0	0	White
0	0	1	0	0	0	1	0	Magenta
0	0	1	0	1	0	1	0	Magenta
0	0	1	1	0	0	1	0	Magenta
0	0	1	1	1	0	1	0	Magenta
0	1	0	0	0	0	1	0	Magenta
0	1	0	0	1	0	1	0	Magenta
0	1	0	1	0	0	1	0	Magenta
0	1	0	1	1	0	1	0	Magenta
0	1	1	0	0	0	1	0	Magenta
0	1	1	0	1	0	1	0	Magenta
0	1	1	1	0	0	1	0	Magenta
0	1	1	1	1	0	1	0	Magenta
1	0	0	0	0	0	1	0	Magenta
1	0	0	0	1	0	1	0	Magenta
1	0	0	1	0	0	1	0	Magenta
1	0	0	1	1	0	1	0	Magenta
1	0	1	0	0	0	1	0	Magenta
1	0	1	0	1	0	1	0	Magenta
1	0	1	1	0	0	1	0	Magenta
1	0	1	1	1	0	1	0	Magenta
1	1	0	0	0	BLINK	0	1	Blinking Green & Yellow
1	1	0	0	1	0	0	1	Yellow
1	1	0	1	0	0	1	0	Magenta
1	1	0	1	1	1	1	0	Blue
1	1	1	0	0	0	1	0	Magenta
1	1	1	0	1	0	1	0	Magenta
1	1	1	1	0	0	1	0	Magenta
1	1	1	1	1	1	0	1	Green

BOM_COST_GROUP=DEBUG

SYNC_MASTER= SYNC_DATE=

PAGE TITLE

DEV SUPPORT 2

Apple Inc.

DRAWING NUMBER 051-05309

SIZE D

REVISION 6.0.0

BRANCH pvt

PAGE 141 OF 500

SHEET 90 OF 98

NOTICE OF PROPRIETARY PROPERTY:

THE INFORMATION CONTAINED HEREIN IS THE PROPRIETARY PROPERTY OF APPLE INC.
THE POSESSOR AGREES TO THE FOLLOWING:
I TO MAINTAIN THIS DOCUMENT IN CONFIDENCE
II NOT TO REPRODUCE OR COPY IT
III NOT TO REVEAL OR PUBLISH IT IN WHOLE OR PART
IV ALL RIGHTS RESERVED

CPU

PART NUMBER	QTY	DESCRIPTION	REFERENCE DES	CRITICAL	BOM OPTION
337S00574	1	CPU,CFLU,SRCUU,QS,D0,2.3,28W,1.05,BGA1528	U0500	CRITICAL	CPU:28W_2P3G_SRCUU
337S00572	1	CPU,CFLU,SRCK5,QS,D0,2.7,28W,1.2,BGA1528	U0500	CRITICAL	CPU:28W_2P7G_SRCK5
337S00693	1	CPU,CFLU,QRH7,QS,D0,1.4,1.05,BGA1528	U0500	CRITICAL	CPU:15W_1P4G_QRH7
337S00692	1	CPU,CFLU,QRH6,QS,D0,1.7,1.15,BGA1528	U0500	CRITICAL	CPU:15W_1P7G_QRH6
337S00717	1	CPU,CFLU,SREZ2,PRQ,D0,1.4,4C,1.05,BGA1528	U0500	CRITICAL	CPU:15W_1P4G_SREZ2
337S00716	1	CPU,CFLU,SREZ1,PRQ,D0,1.7,4C,1.15,BGA1528	U0500	CRITICAL	CPU:15W_1P7G_SREZ1

SOC

PART NUMBER	QTY	DESCRIPTION	REFERENCE DES	CRITICAL	BOM OPTION
339S00386	1	POP,GIBRALTAR+1GB 20NM,M,DEV,SCK,CSP1122	U3900	CRITICAL	SOC:DEV_1G
339S00388	1	POP,GIBRALTAR+2GB 20NM,M,DEV,SCK,CSP1122	U3900	CRITICAL	SOC:DEV_2G
339S00601	1	POP,GIBRALTAR_L+1GB 16NM,M,B0,SCK,C1122	U3900	CRITICAL	SOC:PROD_B0_1G
339S00605	1	POP,GIBRALTAR_L+2GB 16NM,M,B0,SCK,C1122	U3900	CRITICAL	SOC:PROD_B0_2G

AMR ASSEMBLY

PART NUMBER	QTY	DESCRIPTION	REFERENCE DES	CRITICAL	BOM OPTION
677-19902	1	SUBASSY (T&R) PCBA,AMR INTERPOSER,X941	J4800	CRITICAL	AMR:POC

TBT

PART NUMBER	QTY	DESCRIPTION	REFERENCE DES	CRITICAL	BOM OPTION
338S00441	1	IC,TBT,TITAN RIDGE DP,SLMHS,PRQ,C1,CSP337	U2800	CRITICAL	TBT:TR_C1_PRQ

UPC

PART NUMBER	QTY	DESCRIPTION	REFERENCE DES	CRITICAL	BOM OPTION
353S02158	4	IC,CD3217,ACE2,B2,USB PWR SW W/HV,BGA123	U3100,U3200	CRITICAL	UPC:ACE2_B2

WIRELESS

PART NUMBER	QTY	DESCRIPTION	REFERENCE DES	CRITICAL	BOM OPTION
339S00586	1	MODULE,WIFI/BT,SAPPORO,ES2.1,M,LGA451	U3701	CRITICAL	MODULE:MUR__ES_2P1
339S00599	1	MODULE,WIFI/BT,SAPPORO,ES23,M,LGA451	U3701	CRITICAL	MODULE:MUR_ES_2P3
339S00616	1	MODULE,WIFI/BT,SAPPORO,ES3.1,M,LGA451	U3701	CRITICAL	MODULE:MUR_ES_3P1
339S00628	1	MODULE,WIFI/BT,SAPPORO,ES2.3,U,LGA451	U3701	CRITICAL	MODULE:USI_ES_2P3
339S00632	1	MODULE,WIFI/BT,SAPPORO,ES3.1,U,LGA451	U3701	CRITICAL	MODULE:USI_ES_3P1
339S00750	1	MODULE,WIFI/BT,SAPPORO,ES3.3,U,LGA451	U3701	CRITICAL	MODULE:USI_ES_3P1

PMU

PART NUMBER	QTY	DESCRIPTION	REFERENCE DES	CRITICAL	BOM OPTION
338S00466	1	IC,PMU,CALPE-L,D2249A0,OTP-BC,CSP324	U7800	CRITICAL	CALPE_L:OTP_BC

CHARGER IC

PART NUMBER	QTY	DESCRIPTION	REFERENCE DES	CRITICAL	BOM OPTION
353S01525	1	IC,ISL9240HIB0Z,PMU,SUONA,WCSP40,2.1X3.3	U7000	CRITICAL	CHARGER_IC:POC

DRAM

PART NUMBER	QTY	DESCRIPTION	REFERENCE DES	CRITICAL	BOM OPTION
333S00125	4	IC,SDRAM,LPDDR3-2133,16GBIT,21NM,H,BGA178	U2300,U2400,U2500,U2600	CRITICAL	DRAM:08GB_HY
333S00246	4	IC,SDRAM,LPDDR3-2133,16GBIT,18NM,BGA178	U2300,U2400,U2500,U2600	CRITICAL	DRAM:08GB_SS_D
333S00126	4	IC,SDRAM,LPDDR3-2133,32GBIT,21NM,H,BGA178	U2300,U2400,U2500,U2600	CRITICAL	DRAM:16GB_HY
333S00247	4	IC,SDRAM,LPDDR3-2133,32GBIT,18NM,BGA178	U2300,U2400,U2500,U2600	CRITICAL	DRAM:16GB_SS_D

SE

PART NUMBER	QTY	DESCRIPTION	REFERENCE DES	CRITICAL	BOM OPTION
998-15216	1	IC,SN100V,VENUS,DEV KEY,B2,S/W-M,WLCSP72	U5001	CRITICAL	SE:DEV_2019
338S00445	1	IC,SN100V,VENUS,PROD KEY,B2,SW-N,WLCSP72	U5001	CRITICAL	SE:PROD_2019

OCARINA

PART NUMBER	QTY	DESCRIPTION	REFERENCE DES	CRITICAL	BOM OPTION
338S00410	1	IC,PMU,OCARINA,D2499A0,OTP-AG,WLCSP56	U9000	CRITICAL	SSD:4L

VR INDUCTOR VCCSA

PART NUMBER	QTY	DESCRIPTION	REFERENCE DES	CRITICAL	BOM OPTION
152S00689	1	IND,MLD,0.47UH,4.7MO,17.5A,5.6X5.2X2.4MM	L7270	CRITICAL	IND_VCCSA:CYNTEC

BACKLIGHT VOUT FILTER

PART NUMBER	QTY	DESCRIPTION	REFERENCE DES	CRITICAL	BOM OPTION
116S00006	1	RES,MTL FILM,0 OHM,TIGHT TOL,3A,0402	L8420	CRITICAL	BKLT_FILT:ZERO_OHM

USBC AARDVARKANOID

PART NUMBER	QTY	DESCRIPTION	REFERENCE DES	CRITICAL	BOM OPTION
516S00115	1	CONN,PLUG,B2B,12+2P,P=0.35MM,H=0.6MM	J3002	CRITICAL	USBC_AARDVARKANOID

TBT ROM

PART NUMBER	QTY	DESCRIPTION	REFERENCE DES	CRITICAL	BOM OPTION
341S01553	1	ROM,BBR/ACE(V48.2) PROTO-1-B,X1782	U2890	CRITICAL	TBT_ROM:P1B
341S01591	1	ROM,BBR/ACE(V41.13) EVT,X1782	U2890	CRITICAL	TBT_ROM:EVT
341S01632	1	ROM,BBR/ACE(V51.2) PVT,X1782	U2890	CRITICAL	TBT_ROM:PVT

BT ROM

PART NUMBER	QTY	DESCRIPTION	REFERENCE DES	CRITICAL	BOM OPTION
335S00348	1	IC,SPI SERIAL FLASH,4M BIT,1.8V,USON8	U3750	CRITICAL	BT_ROM:BLANK_WINBOND
335S00400	1	IC,SPI SERIAL FLASH,4M BIT,1.8V,USON8	U3750	CRITICAL	BT_ROM:BLANK_MACRONIX
341S01184	1	BT SFLASH ROM (V2) PROTO-0,X1536	U3750	CRITICAL	BT_ROM:P0
341S01260	1	ROM,BT SFLASH (VXX) PROTO-1,X1536	U3750	CRITICAL	BT_ROM:P1
341S01638	1	ROM,BT SFLASH (V3.17.43) PVT,X1783	U3750	CRITICAL	BT_ROM:PVT

WIFI ROM

PART NUMBER	QTY	DESCRIPTION	REFERENCE DES	CRITICAL	BOM OPTION
335S00214	1	IC,EEPROM,SER,UWIRE,16K,1.8V,DFN8	U3710	CRITICAL	WIFI_ROM:BLANK_ON
335S00216	1	IC,EEPROM,SER,UWIRE,16K,1.8V,DFN8	U3710	CRITICAL	WIFI_ROM:BLANK_ROHM
341S01087	1	IC,WIFI ROM (V1) WW1,X1536	U3710	CRITICAL	WIFI_ROM:V00
341S01394	1	ROM,WIFI (VXX) (NEW FOR DVT) WW1,X1536	U3710	CRITICAL	WIFI_ROM:DVT
341S01637	1	ROM,WIFI (V1.1) WW1,X1783	U3710	CRITICAL	WIFI_ROM:PVT

SPEAKER AMP

PART NUMBER	QTY	DESCRIPTION	REFERENCE DES	CRITICAL	BOM OPTION
353S01629	4	IC,TAS5770L,B2,CLASS D AMP,CSP30	U6400,U6450,U6500,U6550	CRITICAL	SPEAKER_AMP:B2
353S01871	4	IC,TAS5770L,C0,CLASS D AMP,CSP30	U6400,U6450,U6500,U6550	CRITICAL	SPEAKER_AMP:C0

VR DRIVER CPU CORE

PART NUMBER	QTY	DESCRIPTION	REFERENCE DES	CRITICAL	BOM OPTION
353S00519	2	IC,SIC621,DR MOS,IMVP-8,60A,PQFN31,5X5MM	U7210,U7220	CRITICAL	DR_MOS_CORE:VISHAY

VR DRIVER CPU VCCSA

PART NUMBER	QTY	DESCRIPTION	REFERENCE DES	CRITICAL	BOM OPTION
353S00525	1	IC,SIC532,DR MOS,IMVP-8,30A,PQFN22,45X35	U7270	CRITICAL	DR_MOS_VCCSA:VISHAY

VR DRIVER CPU GT

PART NUMBER	QTY	DESCRIPTION	REFERENCE DES	CRITICAL	BOM OPTION
353S00519	2	IC,SIC621,DR MOS,IMVP-8,60A,PQFN31,5X5MM	U7410,U7420	CRITICAL	DR_MOS_GT:VISHAY

SYNC_MASTER= SYNC_DATE=

PAGE TITLE

BOM CONFIGURATION

Apple Inc.

DRAWING NUMBER 051-05309 SIZE D

REVISION 6.0.0

BRANCH pvt

PAGE 400 OF 500

SHEET 91 OF 98

NOTICE OF PROPRIETARY PROPERTY:
THE INFORMATION CONTAINED HEREIN IS THE PROPRIETARY PROPERTY OF APPLE INC.
THE POSESSOR AGREES TO THE FOLLOWING:
I TO MAINTAIN THIS DOCUMENT IN CONFIDENCE
II NOT TO REPRODUCE OR COPY IT
III NOT TO REVEAL OR PUBLISH IT IN WHOLE OR PART
IV ALL RIGHTS RESERVED

NAND U8600

PART NUMBER	QTY	DESCRIPTION	REFERENCE DES	CRITICAL	BOM OPTION
335S00377	1	NAND,3DV4,64GBT,S4E,256G,H,SLGA110	U8600	CRITICAL	NAND_U8600:2DP_HY
335S00393	1	NAND,3DV4,64GBT,XXX,S4E,256G,H,SLGA110	U8600	CRITICAL	NAND_U8600:2DP_TS
335S00388	1	NAND,3DV4,64GBT,XXX,S4E,256G,SD,SLGA110	U8600	CRITICAL	NAND_U8600:2DP_WD
335S00416	1	NAND,3DV5,64GBT,S4E,256G,SS,SLGA110	U8600	CRITICAL	NAND_U8600:2DP_SS
335T00001	1	NAND,3DV5,64GBT,XXX,S4E,256G,T,SLGA110	U8600	CRITICAL	NAND_U8600:2DP_TS_SLT
335T00017	1	NAND,3DV5,64GBT,S4E,256G,H,SLGA110	U8600	CRITICAL	NAND_U8600:2DP_HY_SLT
335T00008	1	NAND,3DV5,64GBT,S4E,256G,SS,SLGA110	U8600	CRITICAL	NAND_U8600:2DP_SS_SLT
335S00394	1	NAND,3DV4,128GBT,XXX,256G,T,SLGA110	U8600	CRITICAL	NAND_U8600:4DP_TS
335S00378	1	NAND,3DV4,128GBT,S4E,256G,H,SLGA110	U8600	CRITICAL	NAND_U8600:4DP_HY
335S00424	1	NAND,3DV5,128GBT,S4E,256G,SS,SLGA110	U8600	CRITICAL	NAND_U8600:4DP_SS
335T00002	1	NAND,3DV4,128GBT,XXX,S4E,256G,T,SLGA110	U8600	CRITICAL	NAND_U8600:4DP_TS_SLT
335T00018	1	NAND,3DV4,128GBT,S4E,256G,H,SLGA110	U8600	CRITICAL	NAND_U8600:4DP_HY_SLT
335T00009	1	NAND,3DV5,128GBT,S4E,256G,SS,SLGA110	U8600	CRITICAL	NAND_U8600:4DP_SS_SLT
335S00398	1	NAND,3DV4,192GBT,XXX,S4E,256G,H,SLGA110	U8600	CRITICAL	NAND_U8600:6DP_HY
335S00395	1	NAND,3DV4,192GBT,XXX,S4E,256G,T,SLGA110	U8600	CRITICAL	NAND_U8600:6DP_TS
335T00005	1	NAND,3DV4,192GBT,XXX,S4E,256G,T,SLGA110	U8600	CRITICAL	NAND_U8600:6DP_TS_SLT
335T00019	1	NAND,3DV4,192GBT,XXX,S4E,256G,H,SLGA110	U8600	CRITICAL	NAND_U8600:6DP_HY_SLT
335S00379	1	NAND,3DV4,256GBT,S4E,256G,H,SLGA110	U8600	CRITICAL	NAND_U8600:8DP_HY
335S00327	1	NAND,3DV3,256GBP,133,S4E,170G,SD,ULGA110	U8600	CRITICAL	NAND_U8600:8DP_WD
335S00396	1	NAND,3DV4,256GBT,XXX,S4E,256G,T,SLGA110	U8600	CRITICAL	NAND_U8600:8DP_TS
335T00006	1	NAND,3DV4,256GBT,XXX,S4E,256G,T,SLGA110	U8600	CRITICAL	NAND_U8600:8DP_TS_SLT
335T00020	1	NAND,3DV4,256GBT,S4E,256G,H,SLGA110	U8600	CRITICAL	NAND_U8600:8DP_HY_SLT
335S00399	1	NAND,3DV4,320GBT,XXX,S4E,256G,H,SLGA110	U8600	CRITICAL	NAND_U8600:10DP_HY
335S00397	1	NAND,3DV4,320GBT,XXX,S4E,256G,T,SLGA110	U8600	CRITICAL	NAND_U8600:10DP_TS
335T00021	1	NAND,3DV4,320GBT,XXX,S4E,256G,H,SLGA110	U8600	CRITICAL	NAND_U8600:10DP_HY_SLT
335T00007	1	NAND,3DV4,320GBT,XXX,S4E,256G,T,SLGA110	U8600	CRITICAL	NAND_U8600:10DP_TS_SLT
335S00380	1	NAND,3DV4,512GBT,S4E,256G,H,SLGA110	U8600	CRITICAL	NAND_U8600:16DP_HY
335S00391	1	NAND,3DV4,512GBT,XXX,S4E,256G,SD,SLGA110	U8600	CRITICAL	NAND_U8600:16DP_WD
335T00022	1	NAND,3DV4,512GBT,S4E,256G,H,SLGA110	U8600	CRITICAL	NAND_U8600:16DP_HY_SLT
335T00016	1	NAND,3DV4,512GBT,XXX,S4E,256G,SD,SLGA110	U8600	CRITICAL	NAND_U8600:16DP_WD_SLT

NAND U8700

PART NUMBER	QTY	DESCRIPTION	REFERENCE DES	CRITICAL	BOM OPTION
335S00377	1	NAND,3DV4,64GBT,S4E,256G,H,SLGA110	U8700	CRITICAL	NAND_U8700:2DP_HY
335S00393	1	NAND,3DV4,64GBT,XXX,S4E,256G,H,SLGA110	U8700	CRITICAL	NAND_U8700:2DP_TS
335S00388	1	NAND,3DV4,64GBT,XXX,S4E,256G,SD,SLGA110	U8700	CRITICAL	NAND_U8700:2DP_WD
335S00416	1	NAND,3DV5,64GBT,S4E,256G,SS,SLGA110	U8700	CRITICAL	NAND_U8700:2DP_SS
335T00001	1	NAND,3DV5,64GBT,XXX,S4E,256G,T,SLGA110	U8700	CRITICAL	NAND_U8700:2DP_TS_SLT
335T00017	1	NAND,3DV5,64GBT,S4E,256G,H,SLGA110	U8700	CRITICAL	NAND_U8700:2DP_HY_SLT
335T00008	1	NAND,3DV5,64GBT,S4E,256G,SS,SLGA110	U8700	CRITICAL	NAND_U8700:2DP_SS_SLT
335S00394	1	NAND,3DV4,128GBT,XXX,256G,T,SLGA110	U8700	CRITICAL	NAND_U8700:4DP_TS
335S00378	1	NAND,3DV4,128GBT,S4E,256G,H,SLGA110	U8700	CRITICAL	NAND_U8700:4DP_HY
335S00424	1	NAND,3DV5,128GBT,S4E,256G,SS,SLGA110	U8700	CRITICAL	NAND_U8700:4DP_SS
335T00002	1	NAND,3DV4,128GBT,XXX,S4E,256G,T,SLGA110	U8700	CRITICAL	NAND_U8700:4DP_TS_SLT
335T00018	1	NAND,3DV4,128GBT,S4E,256G,H,SLGA110	U8700	CRITICAL	NAND_U8700:4DP_HY_SLT
335T00009	1	NAND,3DV5,128GBT,S4E,256G,SS,SLGA110	U8700	CRITICAL	NAND_U8700:4DP_SS_SLT
335S00398	1	NAND,3DV4,192GBT,XXX,S4E,256G,H,SLGA110	U8700	CRITICAL	NAND_U8700:6DP_HY
335S00395	1	NAND,3DV4,192GBT,XXX,S4E,256G,T,SLGA110	U8700	CRITICAL	NAND_U8700:6DP_TS
335T00005	1	NAND,3DV4,192GBT,XXX,S4E,256G,T,SLGA110	U8700	CRITICAL	NAND_U8700:6DP_TS_SLT
335T00019	1	NAND,3DV4,192GBT,XXX,S4E,256G,H,SLGA110	U8700	CRITICAL	NAND_U8700:6DP_HY_SLT
335S00379	1	NAND,3DV4,256GBT,S4E,256G,H,SLGA110	U8700	CRITICAL	NAND_U8700:8DP_HY
335S00327	1	NAND,3DV3,256GBP,133,S4E,170G,SD,ULGA110	U8700	CRITICAL	NAND_U8700:8DP_WD
335S00396	1	NAND,3DV4,256GBT,XXX,S4E,256G,T,SLGA110	U8700	CRITICAL	NAND_U8700:8DP_TS
335T00006	1	NAND,3DV4,256GBT,XXX,S4E,256G,T,SLGA110	U8700	CRITICAL	NAND_U8700:8DP_TS_SLT
335T00020	1	NAND,3DV4,256GBT,S4E,256G,H,SLGA110	U8700	CRITICAL	NAND_U8700:8DP_HY_SLT
335S00399	1	NAND,3DV4,320GBT,XXX,S4E,256G,H,SLGA110	U8700	CRITICAL	NAND_U8700:10DP_HY
335S00397	1	NAND,3DV4,320GBT,XXX,S4E,256G,T,SLGA110	U8700	CRITICAL	NAND_U8700:10DP_TS
335T00021	1	NAND,3DV4,320GBT,XXX,S4E,256G,H,SLGA110	U8700	CRITICAL	NAND_U8700:10DP_HY_SLT
335T00007	1	NAND,3DV4,320GBT,XXX,S4E,256G,T,SLGA110	U8700	CRITICAL	NAND_U8700:10DP_TS_SLT
335S00380	1	NAND,3DV4,512GBT,S4E,256G,H,SLGA110	U8700	CRITICAL	NAND_U8700:16DP_HY
335S00391	1	NAND,3DV4,512GBT,XXX,S4E,256G,SD,SLGA110	U8700	CRITICAL	NAND_U8700:16DP_WD
335T00022	1	NAND,3DV4,512GBT,S4E,256G,H,SLGA110	U8700	CRITICAL	NAND_U8700:16DP_HY_SLT
335T00016	1	NAND,3DV4,512GBT,XXX,S4E,256G,SD,SLGA110	U8700	CRITICAL	NAND_U8700:16DP_WD_SLT

NAND U8800

PART NUMBER	QTY	DESCRIPTION	REFERENCE DES	CRITICAL	BOM OPTION
335S00377	1	NAND,3DV4,64GBT,S4E,256G,H,SLGA110	U8800	CRITICAL	NAND_U8800:2DP_HY
335S00393	1	NAND,3DV4,64GBT,XXX,S4E,256G,H,SLGA110	U8800	CRITICAL	NAND_U8800:2DP_TS
335S00388	1	NAND,3DV4,64GBT,XXX,S4E,256G,SD,SLGA110	U8800	CRITICAL	NAND_U8800:2DP_WD
335S00416	1	NAND,3DV5,64GBT,S4E,256G,SS,SLGA110	U8800	CRITICAL	NAND_U8800:2DP_SS
335T00001	1	NAND,3DV5,64GBT,XXX,S4E,256G,T,SLGA110	U8800	CRITICAL	NAND_U8800:2DP_TS_SLT
335T00017	1	NAND,3DV5,64GBT,S4E,256G,H,SLGA110	U8800	CRITICAL	NAND_U8800:2DP_HY_SLT
335T00008	1	NAND,3DV5,64GBT,S4E,256G,SS,SLGA110	U8800	CRITICAL	NAND_U8800:2DP_SS_SLT
335S00394	1	NAND,3DV4,128GBT,XXX,256G,T,SLGA110	U8800	CRITICAL	NAND_U8800:4DP_TS
335S00378	1	NAND,3DV4,128GBT,S4E,256G,H,SLGA110	U8800	CRITICAL	NAND_U8800:4DP_HY
335S00424	1	NAND,3DV5,128GBT,S4E,256G,SS,SLGA110	U8800	CRITICAL	NAND_U8800:4DP_SS
335T00002	1	NAND,3DV4,128GBT,XXX,S4E,256G,T,SLGA110	U8800	CRITICAL	NAND_U8800:4DP_TS_SLT
335T00018	1	NAND,3DV4,128GBT,S4E,256G,H,SLGA110	U8800	CRITICAL	NAND_U8800:4DP_HY_SLT
335T00009	1	NAND,3DV5,128GBT,S4E,256G,SS,SLGA110	U8800	CRITICAL	NAND_U8800:4DP_SS_SLT
335S00398	1	NAND,3DV4,192GBT,XXX,S4E,256G,H,SLGA110	U8800	CRITICAL	NAND_U8800:6DP_HY
335S00395	1	NAND,3DV4,192GBT,XXX,S4E,256G,T,SLGA110	U8800	CRITICAL	NAND_U8800:6DP_TS
335T00005	1	NAND,3DV4,192GBT,XXX,S4E,256G,T,SLGA110	U8800	CRITICAL	NAND_U8800:6DP_TS_SLT
335T00019	1	NAND,3DV4,192GBT,XXX,S4E,256G,H,SLGA110	U8800	CRITICAL	NAND_U8800:6DP_HY_SLT
335S00379	1	NAND,3DV4,256GBT,S4E,256G,H,SLGA110	U8800	CRITICAL	NAND_U8800:8DP_HY
335S00327	1	NAND,3DV3,256GBP,133,S4E,170G,SD,ULGA110	U8800	CRITICAL	NAND_U8800:8DP_WD
335S00396	1	NAND,3DV4,256GBT,XXX,S4E,256G,T,SLGA110	U8800	CRITICAL	NAND_U8800:8DP_TS
335T00006	1	NAND,3DV4,256GBT,XXX,S4E,256G,T,SLGA110	U8800	CRITICAL	NAND_U8800:8DP_TS_SLT
335T00020	1	NAND,3DV4,256GBT,S4E,256G,H,SLGA110	U8800	CRITICAL	NAND_U8800:8DP_HY_SLT
335S00399	1	NAND,3DV4,320GBT,XXX,S4E,256G,H,SLGA110	U8800	CRITICAL	NAND_U8800:10DP_HY
335S00397	1	NAND,3DV4,320GBT,XXX,S4E,256G,T,SLGA110	U8800	CRITICAL	NAND_U8800:10DP_TS
335T00021	1	NAND,3DV4,320GBT,XXX,S4E,256G,H,SLGA110	U8800	CRITICAL	NAND_U8800:10DP_HY_SLT
335T00007	1	NAND,3DV4,320GBT,XXX,S4E,256G,T,SLGA110	U8800	CRITICAL	NAND_U8800:10DP_TS_SLT
335S00380	1	NAND,3DV4,512GBT,S4E,256G,H,SLGA110	U8800	CRITICAL	NAND_U8800:16DP_HY
335S00391	1	NAND,3DV4,512GBT,XXX,S4E,256G,SD,SLGA110	U8800	CRITICAL	NAND_U8800:16DP_WD
335T00022	1	NAND,3DV4,512GBT,S4E,256G,H,SLGA110	U8800	CRITICAL	NAND_U8800:16DP_HY_SLT
335T00016	1	NAND,3DV4,512GBT,XXX,S4E,256G,SD,SLGA110	U8800	CRITICAL	NAND_U8800:16DP_WD_SLT

NAND U8900

PART NUMBER	QTY	DESCRIPTION	REFERENCE DES	CRITICAL	BOM OPTION
335S00377	1	NAND,3DV4,64GBT,S4E,256G,H,SLGA110	U8900	CRITICAL	NAND_U8900:2DP_HY
335S00393	1	NAND,3DV4,64GBT,XXX,S4E,256G,H,SLGA110	U8900	CRITICAL	NAND_U8900:2DP_TS
335S00388	1	NAND,3DV4,64GBT,XXX,S4E,256G,SD,SLGA110	U8900	CRITICAL	NAND_U8900:2DP_WD
335S00416	1	NAND,3DV5,64GBT,S4E,256G,SS,SLGA110	U8900	CRITICAL	NAND_U8900:2DP_SS
335T00001	1	NAND,3DV5,64GBT,XXX,S4E,256G,T,SLGA110	U8900	CRITICAL	NAND_U8900:2DP_TS_SLT
335T00017	1	NAND,3DV5,64GBT,S4E,256G,H,SLGA110	U8900	CRITICAL	NAND_U8900:2DP_HY_SLT
335T00008	1	NAND,3DV5,64GBT,S4E,256G,SS,SLGA110	U8900	CRITICAL	NAND_U8900:2DP_SS_SLT
335S00394	1	NAND,3DV4,128GBT,XXX,256G,T,SLGA110	U8900	CRITICAL	NAND_U8900:4DP_TS
335S00378	1	NAND,3DV4,128GBT,S4E,256G,H,SLGA110	U8900	CRITICAL	NAND_U8900:4DP_HY
335S00424	1	NAND,3DV5,128GBT,S4E,256G,SS,SLGA110	U8900	CRITICAL	NAND_U8900:4DP_SS
335T00002	1	NAND,3DV4,128GBT,XXX,S4E,256G,T,SLGA110	U8900	CRITICAL	NAND_U8900:4DP_TS_SLT
335T00018	1	NAND,3DV4,128GBT,S4E,256G,H,SLGA110	U8900	CRITICAL	NAND_U8900:4DP_HY_SLT
335T00009	1	NAND,3DV5,128GBT,S4E,256G,SS,SLGA110	U8900	CRITICAL	NAND_U8900:4DP_SS_SLT
335S00398	1	NAND,3DV4,192GBT,XXX,S4E,256G,H,SLGA110	U8900	CRITICAL	NAND_U8900:6DP_HY
335S00395	1	NAND,3DV4,192GBT,XXX,S4E,256G,T,SLGA110	U8900	CRITICAL	NAND_U8900:6DP_TS
335T00005	1	NAND,3DV4,192GBT,XXX,S4E,256G,T,SLGA110	U8900	CRITICAL	NAND_U8900:6DP_TS_SLT
335T00019	1	NAND,3DV4,192GBT,XXX,S4E,256G,H,SLGA110	U8900	CRITICAL	NAND_U8900:6DP_HY_SLT
335S00379	1	NAND,3DV4,256GBT,S4E,256G,H,SLGA110	U8900	CRITICAL	NAND_U8900:8DP_HY
335S00327	1	NAND,3DV3,256GBP,133,S4E,170G,SD,ULGA110	U8900	CRITICAL	NAND_U8900:8DP_WD
335S00396	1	NAND,3DV4,256GBT,XXX,S4E,256G,T,SLGA110	U8900	CRITICAL	NAND_U8900:8DP_TS
335T00006	1	NAND,3DV4,256GBT,XXX,S4E,256G,T,SLGA110	U8900	CRITICAL	NAND_U8900:8DP_TS_SLT
335T00020	1	NAND,3DV4,256GBT,S4E,256G,H,SLGA110	U8900	CRITICAL	NAND_U8900:8DP_HY_SLT
335S00399	1	NAND,3DV4,320GBT,XXX,S4E,256G,H,SLGA110	U8900	CRITICAL	NAND_U8900:10DP_HY
335S00397	1	NAND,3DV4,320GBT,XXX,S4E,256G,T,SLGA110	U8900	CRITICAL	NAND_U8900:10DP_TS
335T00021	1	NAND,3DV4,320GBT,XXX,S4E,256G,H,SLGA110	U8900	CRITICAL	NAND_U8900:10DP_HY_SLT
335T00007	1	NAND,3DV4,320GBT,XXX,S4E,256G,T,SLGA110	U8900	CRITICAL	NAND_U8900:10DP_TS_SLT
335S00380	1	NAND,3DV4,512GBT,S4E,256G,H,SLGA110	U8900	CRITICAL	NAND_U8900:16DP_HY
335S00391	1	NAND,3DV4,512GBT,XXX,S4E,256G,SD,SLGA110	U8900	CRITICAL	NAND_U8900:16DP_WD
335T00022	1	NAND,3DV4,512GBT,S4E,256G,H,SLGA110	U8900	CRITICAL	NAND_U8900:16DP_HY_SLT
335T00016	1	NAND,3DV4,512GBT,XXX,S4E,256G,SD,SLGA110	U8900	CRITICAL	NAND_U8900:16DP_WD_SLT

SYNC_MASTER= SYNC_DATE=

PAGE TITLE

BOM CONFIGURATION

Apple Inc.

DRAWING NUMBER 051-05309 SIZE D

REVISION 6.0.0

BRANCH pvt

PAGE 401 OF 500

SHEET 92 OF 98

NOTICE OF PROPRIETARY PROPERTY:
THE INFORMATION CONTAINED HEREIN IS THE PROPRIETARY PROPERTY OF APPLE INC.
THE POSESSOR AGREES TO THE FOLLOWING:
I TO MAINTAIN THIS DOCUMENT IN CONFIDENCE
II NOT TO REPRODUCE OR COPY IT
III NOT TO REVEAL OR PUBLISH IT IN WHOLE OR PART
IV ALL RIGHTS RESERVED

COMMON BOM GROUPS

BOM GROUP	BOM OPTIONS
X1782_COMMON_PARTS	SCH,PCB,ALT_CMN,COMMON,ALTERNATE:PART,X1782_USB,X1782_WIFI_MISC,X1782_X86,X1782_MISC,X1782_T290,SENSE_PROD
X1782_USB	TBT:TR_C1_PRQ,UPC:ACE2_B2,TBT_ROM:PVT,USBC_SHLD
X1782_WIFI_MISC	MODULE:MUR_ES_3P1,WIFI_ROM:PVT,BT_ROM:PVT,STANDOFFS_TOP,STANDOFFS_BOT,CPU_SLEDS
X1782_X86	EDP_ENABLE,DR_MOS_CORE:VISHAY,DR_MOS_VCCSA:VISHAY,DR_MOS_GT:VISHAY,IND_VCCSA:CYNTEC,DRAM_TOP_FENC,DRAM_BOT_CAN
X1782_T290	BOARDID0,BOARDID1,BOARDID3,BOARDID4,BOARDID5,BOARDREV2,CALPE_L:OTP_BC,SE:PROD_2019,NAND_VCC:2.5V,MEGA_SHLD
X1782_MISC	CHARGER_IC:POC,AMR:POC,SPEAKER_AMP:C0,SOC_DFU_BYPASS,BKLT_FILT:ZERO_OHM,XDP:YES,WASHER_DFR,LOADRC:NO

DEBUG BOM PARTS

BOM GROUP	BOM OPTIONS
X1782_DEV_1	XDP_CONN:YES
X1782_DEV_2	USBC_AARDVARKANOID,USBC_ARKANOID

DRAM AND SPD

BOM GROUP	BOM OPTIONS
X1782_08GB_HY	DRAM:08GB_HY,RAMCFG4_L,RAMCFG3_L,RAMCFG2_L,RAMCFG1_L,RAMCFG0_L
X1782_08GB_SS	DRAM:08GB_SS_D,RAMCFG2_L,RAMCFG0_L
X1782_16GB_HY	DRAM:16GB_HY,RAMCFG4_L,RAMCFG3_L,RAMCFG1_L,RAMCFG0_L
X1782_16GB_SS	DRAM:16GB_SS_D,RAMCFG0_L
X1782_NO_DRAM	DRAM:OFF

CPU

BOM GROUP	BOM OPTIONS
X1782_CPU_1P4GHZ	CPU:15W_1P4G_SREZ2
X1782_CPU_1P7GHZ	CPU:15W_1P7G_SREZ1
X1782_CPU_NO_CPU	CPU:OFF

SOC AND NAND

BOM GROUP	BOM OPTIONS
X1782_TLC_128GB_HY	SOC:PROD_B0_1G,SSD:2L,NAND_U8600:2DP_HY_SLT,NAND_U8700:2DP_HY_SLT
X1782_TLC_128GB_TS	SOC:PROD_B0_1G,SSD:2L,NAND_U8600:2DP_TS_SLT,NAND_U8700:2DP_TS_SLT
X1782_TLC_256GB_HY	SOC:PROD_B0_1G,SSD:4L,NAND_U8600:4DP_HY_SLT,NAND_U8700:2DP_HY_SLT,NAND_U8800:2DP_HY_SLT,NAND_U8900:2DP_HY_SLT
X1782_TLC_256GB_TS	SOC:PROD_B0_1G,SSD:4L,NAND_U8600:4DP_TS_SLT,NAND_U8700:2DP_TS_SLT,NAND_U8800:2DP_TS_SLT,NAND_U8900:2DP_TS_SLT
X1782_TLC_256GB_SS	SOC:PROD_B0_1G,SSD:4L,NAND_U8600:4DP_SS_SLT,NAND_U8700:2DP_SS_SLT,NAND_U8800:2DP_SS_SLT,NAND_U8900:2DP_SS_SLT
X1782_TLC_512GB_HY	SOC:PROD_B0_1G,SSD:4L,NAND_U8600:6DP_HY_SLT,NAND_U8700:6DP_HY_SLT,NAND_U8800:4DP_HY_SLT,NAND_U8900:4DP_HY_SLT
X1782_TLC_512GB_TS	SOC:PROD_B0_1G,SSD:4L,NAND_U8600:6DP_TS_SLT,NAND_U8700:6DP_TS_SLT,NAND_U8800:4DP_TS_SLT,NAND_U8900:4DP_TS_SLT
X1782_TLC_001TB_HY	SOC:PROD_B0_2G,SSD:4L,NAND_U8600:10DP_HY_SLT,NAND_U8700:10DP_HY_SLT,NAND_U8800:8DP_HY_SLT,NAND_U8900:8DP_HY_SLT
X1782_TLC_001TB_TS	SOC:PROD_B0_2G,SSD:4L,NAND_U8600:10DP_TS_SLT,NAND_U8700:10DP_TS_SLT,NAND_U8800:8DP_TS_SLT,NAND_U8900:8DP_TS_SLT
X1782_TLC_002TB_HY	SOC:PROD_B0_2G,SSD:4L,NAND_U8600:16DP_HY_SLT,NAND_U8700:16DP_HY_SLT,NAND_U8800:16DP_HY_SLT,NAND_U8900:16DP_HY_SLT
X1782_TLC_002TB_WD	SOC:PROD_B0_2G,SSD:4L,NAND_U8600:16DP_WD_SLT,NAND_U8700:16DP_WD_SLT,NAND_U8800:16DP_WD_SLT,NAND_U8900:16DP_WD_SLT
X1782_NO_NAND_2_LD	SOC:OFF,SSD:2L,NAND_U8600:OFF,NAND_U8700:OFF,NAND_U8800:OFF,NAND_U8900:OFF
X1782_NO_NAND_4_LD	SOC:OFF,SSD:4L,NAND_U8600:OFF,NAND_U8700:OFF,NAND_U8800:OFF,NAND_U8900:OFF

CPU DRAM CFG[4:0] CHART

DIE REV	CFG 4
A	0
B	1

SPEED	CFG 3
2133	0
1866	1

CAPACITY	CFG 2
8GB	0
16GB	1

VENDOR	CFG 1	CFG 0
HYNIX	0	0
MICRON	0	1
SAMSUNG	1	0
N/A	1	1

SYSTEM PARTS

PART NUMBER	QTY	DESCRIPTION	REFERENCE DES	CRITICAL	BOM OPTION
051-05309	1	SCHEM,MLB,X1782	SCH	CRITICAL	SCH
820-01987	1	PCBF,MLB,X1782	PCB	CRITICAL	PCB
685-00331	1	COMMON PARTS,MLB,X1782	COMMON_PARTS	CRITICAL	X1782_COMMON_BOM
985-01184	1	DEV,COMMON PARTS,MLB,X1782	DEV_PARTS	CRITICAL	X1782_DEV_BOM

TOP LEVEL BOM

639-XXXX (POR) OR 939-XXXX (DEV)

- COMMON PARTS BOM
  685-00331
- DEBUG PARTS BOM
  985-01184

COMMON PARTS BOM

BOM NUMBER	BOM NAME	BOM OPTIONS
685-00331	COMMON_PARTS,MLB,X1782	X1782_COMMON_PARTS

DEBUG PARTS

BOM NUMBER	BOM NAME	BOM OPTIONS
985-01184	DEV,COMMON_PARTS,MLB,X1782	X1782_DEV_1,X1782_DEV_2

NOTES:

"SENSOR:DEV" IS FOR SENSE RESISTORS. WHEN CURRENT SENSING IS REMOVED AT DVT, THESE RESISTORS WILL BE REPLACED WITH A SPECIAL SYMBOL, A COPPER SHAPE SHORTING THE TWO TERMINALS

"LOADISNS" ARE CIRCUITS ONLY REQUIRED UNTIL DVT TO MEASURE/SENSE CURRENT. SENSE CIRCUITS REQUIRED BY SMC WILL NOT HAVE THIS OPTION SINCE THEY WILL STAY TILL PVT

"LOADRC:YES/NO" RC FILTERS INTO ADC WILL BE REPLACED BY 100K PD ONCE THE SENSE CIRCUITS GO AWAY

SYNC_MASTER= SYNC_DATE=

PAGE TITLE

BOM GROUPS

Apple Inc.

DRAWING NUMBER 051-05309 SIZE D

REVISION 6.0.0

BRANCH pvt

PAGE 403 OF 500

SHEET 93 OF 98

NOTICE OF PROPRIETARY PROPERTY:
THE INFORMATION CONTAINED HEREIN IS THE PROPRIETARY PROPERTY OF APPLE INC.
THE POSESSOR AGREES TO THE FOLLOWING:
I TO MAINTAIN THIS DOCUMENT IN CONFIDENCE
II NOT TO REPRODUCE OR COPY IT
III NOT TO REVEAL OR PUBLISH IT IN WHOLE OR PART
IV ALL RIGHTS RESERVED

POR BOMS - MLB-1 (1.4 GHZ CPU)

BOM NUMBER	BOM NAME	BOM OPTIONS
639-09103	MLB-1,SS-8GB,TS-128GB,X1782	ALT_CMN,ALTERNATE:PART,X1782_COMMON_BOM,X1782_CPU_1P4GHZ,X1782_08GB_SS,X1782_TLC_128GB_TS
639-09102	MLB-1,HY-8GB,TS-128GB,X1782	ALT_CMN,ALTERNATE:PART,X1782_COMMON_BOM,X1782_CPU_1P4GHZ,X1782_08GB_HY,X1782_TLC_128GB_TS
639-10001	MLB-1,SS-8GB,HY-128GB,X1782	ALT_CMN,ALTERNATE:PART,X1782_COMMON_BOM,X1782_CPU_1P4GHZ,X1782_08GB_SS,X1782_TLC_128GB_HY
639-10002	MLB-1,HY-8GB,HY-128GB,X1782	ALT_CMN,ALTERNATE:PART,X1782_COMMON_BOM,X1782_CPU_1P4GHZ,X1782_08GB_HY,X1782_TLC_128GB_HY
639-10003	MLB-1,SS-16GB,HY-128GB,X1782	ALT_CMN,ALTERNATE:PART,X1782_COMMON_BOM,X1782_CPU_1P4GHZ,X1782_16GB_SS,X1782_TLC_128GB_HY
639-10004	MLB-1,SS-16GB,TS-128GB,X1782	ALT_CMN,ALTERNATE:PART,X1782_COMMON_BOM,X1782_CPU_1P4GHZ,X1782_16GB_SS,X1782_TLC_128GB_TS
639-10005	MLB-1,HY-16GB,HY-128GB,X1782	ALT_CMN,ALTERNATE:PART,X1782_COMMON_BOM,X1782_CPU_1P4GHZ,X1782_16GB_HY,X1782_TLC_128GB_HY
639-10006	MLB-1,HY-16GB,TS-128GB,X1782	ALT_CMN,ALTERNATE:PART,X1782_COMMON_BOM,X1782_CPU_1P4GHZ,X1782_16GB_HY,X1782_TLC_128GB_TS
639-10007	MLB-1,SS-8GB,HY-256GB,X1782	ALT_CMN,ALTERNATE:PART,X1782_COMMON_BOM,X1782_CPU_1P4GHZ,X1782_08GB_SS,X1782_TLC_256GB_HY
639-10008	MLB-1,SS-8GB,SS-256GB,X1782	ALT_CMN,ALTERNATE:PART,X1782_COMMON_BOM,X1782_CPU_1P4GHZ,X1782_08GB_SS,X1782_TLC_256GB_SS
639-10009	MLB-1,SS-8GB,TS-256GB,X1782	ALT_CMN,ALTERNATE:PART,X1782_COMMON_BOM,X1782_CPU_1P4GHZ,X1782_08GB_SS,X1782_TLC_256GB_TS
639-10010	MLB-1,HY-8GB,HY-256GB,X1782	ALT_CMN,ALTERNATE:PART,X1782_COMMON_BOM,X1782_CPU_1P4GHZ,X1782_08GB_HY,X1782_TLC_256GB_HY
639-10011	MLB-1,HY-8GB,SS-256GB,X1782	ALT_CMN,ALTERNATE:PART,X1782_COMMON_BOM,X1782_CPU_1P4GHZ,X1782_08GB_HY,X1782_TLC_256GB_SS
639-10012	MLB-1,HY-8GB,TS-256GB,X1782	ALT_CMN,ALTERNATE:PART,X1782_COMMON_BOM,X1782_CPU_1P4GHZ,X1782_08GB_HY,X1782_TLC_256GB_TS
639-10013	MLB-1,SS-16GB,HY-256GB,X1782	ALT_CMN,ALTERNATE:PART,X1782_COMMON_BOM,X1782_CPU_1P4GHZ,X1782_16GB_SS,X1782_TLC_256GB_HY
639-10014	MLB-1,SS-16GB,SS-256GB,X1782	ALT_CMN,ALTERNATE:PART,X1782_COMMON_BOM,X1782_CPU_1P4GHZ,X1782_16GB_SS,X1782_TLC_256GB_SS
639-10015	MLB-1,SS-16GB,TS-256GB,X1782	ALT_CMN,ALTERNATE:PART,X1782_COMMON_BOM,X1782_CPU_1P4GHZ,X1782_16GB_SS,X1782_TLC_256GB_TS
639-10016	MLB-1,HY-16GB,HY-256GB,X1782	ALT_CMN,ALTERNATE:PART,X1782_COMMON_BOM,X1782_CPU_1P4GHZ,X1782_16GB_HY,X1782_TLC_256GB_HY
639-10017	MLB-1,HY-16GB,SS-256GB,X1782	ALT_CMN,ALTERNATE:PART,X1782_COMMON_BOM,X1782_CPU_1P4GHZ,X1782_16GB_HY,X1782_TLC_256GB_SS
639-10018	MLB-1,HY-16GB,TS-256GB,X1782	ALT_CMN,ALTERNATE:PART,X1782_COMMON_BOM,X1782_CPU_1P4GHZ,X1782_16GB_HY,X1782_TLC_256GB_TS
639-10019	MLB-1,SS-8GB,TS-512GB,X1782	ALT_CMN,ALTERNATE:PART,X1782_COMMON_BOM,X1782_CPU_1P4GHZ,X1782_08GB_SS,X1782_TLC_512GB_TS
639-10020	MLB-1,HY-8GB,HY-512GB,X1782	ALT_CMN,ALTERNATE:PART,X1782_COMMON_BOM,X1782_CPU_1P4GHZ,X1782_08GB_HY,X1782_TLC_512GB_HY
639-10021	MLB-1,HY-8GB,TS-512GB,X1782	ALT_CMN,ALTERNATE:PART,X1782_COMMON_BOM,X1782_CPU_1P4GHZ,X1782_08GB_HY,X1782_TLC_512GB_TS
639-10022	MLB-1,SS-16GB,HY-512GB,X1782	ALT_CMN,ALTERNATE:PART,X1782_COMMON_BOM,X1782_CPU_1P4GHZ,X1782_16GB_SS,X1782_TLC_512GB_HY
639-10023	MLB-1,SS-16GB,TS-512GB,X1782	ALT_CMN,ALTERNATE:PART,X1782_COMMON_BOM,X1782_CPU_1P4GHZ,X1782_16GB_SS,X1782_TLC_512GB_TS
639-10024	MLB-1,HY-16GB,HY-512GB,X1782	ALT_CMN,ALTERNATE:PART,X1782_COMMON_BOM,X1782_CPU_1P4GHZ,X1782_16GB_HY,X1782_TLC_512GB_HY
639-10025	MLB-1,HY-16GB,TS-512GB,X1782	ALT_CMN,ALTERNATE:PART,X1782_COMMON_BOM,X1782_CPU_1P4GHZ,X1782_16GB_HY,X1782_TLC_512GB_TS
639-10026	MLB-1,SS-8GB,HY-1TB,X1782	ALT_CMN,ALTERNATE:PART,X1782_COMMON_BOM,X1782_CPU_1P4GHZ,X1782_08GB_SS,X1782_TLC_001TB_HY
639-10027	MLB-1,SS-8GB,TS-1TB,X1782	ALT_CMN,ALTERNATE:PART,X1782_COMMON_BOM,X1782_CPU_1P4GHZ,X1782_08GB_SS,X1782_TLC_001TB_TS
639-10028	MLB-1,HY-8GB,HY-1TB,X1782	ALT_CMN,ALTERNATE:PART,X1782_COMMON_BOM,X1782_CPU_1P4GHZ,X1782_08GB_HY,X1782_TLC_001TB_HY
639-10029	MLB-1,HY-8GB,TS-1TB,X1782	ALT_CMN,ALTERNATE:PART,X1782_COMMON_BOM,X1782_CPU_1P4GHZ,X1782_08GB_HY,X1782_TLC_001TB_TS
639-10030	MLB-1,SS-16GB,HY-1TB,X1782	ALT_CMN,ALTERNATE:PART,X1782_COMMON_BOM,X1782_CPU_1P4GHZ,X1782_16GB_SS,X1782_TLC_001TB_HY
639-10031	MLB-1,SS-16GB,TS-1TB,X1782	ALT_CMN,ALTERNATE:PART,X1782_COMMON_BOM,X1782_CPU_1P4GHZ,X1782_16GB_SS,X1782_TLC_001TB_TS
639-10032	MLB-1,HY-16GB,HY-1TB,X1782	ALT_CMN,ALTERNATE:PART,X1782_COMMON_BOM,X1782_CPU_1P4GHZ,X1782_16GB_HY,X1782_TLC_001TB_HY
639-10033	MLB-1,HY-16GB,TS-1TB,X1782	ALT_CMN,ALTERNATE:PART,X1782_COMMON_BOM,X1782_CPU_1P4GHZ,X1782_16GB_HY,X1782_TLC_001TB_TS
639-10034	MLB-1,SS-8GB,HY-2TB,X1782	ALT_CMN,ALTERNATE:PART,X1782_COMMON_BOM,X1782_CPU_1P4GHZ,X1782_08GB_SS,X1782_TLC_002TB_HY
639-10035	MLB-1,SS-8GB,HY-512GB,X1782	ALT_CMN,ALTERNATE:PART,X1782_COMMON_BOM,X1782_CPU_1P4GHZ,X1782_08GB_SS,X1782_TLC_512GB_HY
639-10036	MLB-1,HY-8GB,HY-2TB,X1782	ALT_CMN,ALTERNATE:PART,X1782_COMMON_BOM,X1782_CPU_1P4GHZ,X1782_08GB_HY,X1782_TLC_002TB_HY
639-10037	MLB-1,HY-8GB,WD-2TB,X1782	ALT_CMN,ALTERNATE:PART,X1782_COMMON_BOM,X1782_CPU_1P4GHZ,X1782_08GB_HY,X1782_TLC_002TB_WD
639-10038	MLB-1,SS-16GB,HY-2TB,X1782	ALT_CMN,ALTERNATE:PART,X1782_COMMON_BOM,X1782_CPU_1P4GHZ,X1782_16GB_SS,X1782_TLC_002TB_HY
639-10039	MLB-1,SS-16GB,WD-2TB,X1782	ALT_CMN,ALTERNATE:PART,X1782_COMMON_BOM,X1782_CPU_1P4GHZ,X1782_16GB_SS,X1782_TLC_002TB_WD
639-10040	MLB-1,HY-16GB,HY-2TB,X1782	ALT_CMN,ALTERNATE:PART,X1782_COMMON_BOM,X1782_CPU_1P4GHZ,X1782_16GB_HY,X1782_TLC_002TB_HY
639-10041	MLB-1,HY-16GB,WD-2TB,X1782	ALT_CMN,ALTERNATE:PART,X1782_COMMON_BOM,X1782_CPU_1P4GHZ,X1782_16GB_HY,X1782_TLC_002TB_WD
639-10084	MLB-1,SS-8GB,WD-2TB,X1782	ALT_CMN,ALTERNATE:PART,X1782_COMMON_BOM,X1782_CPU_1P4GHZ,X1782_08GB_SS,X1782_TLC_002TB_WD

SYNC_MASTER= SYNC_DATE=

PAGE TITLE
BOM VARIANT TABLES

Apple Inc.

DRAWING NUMBER 051-05309 SIZE D
REVISION 6.0.0
BRANCH pvt
PAGE 405 OF 500
SHEET 94 OF 98

NOTICE OF PROPRIETARY PROPERTY:
THE INFORMATION CONTAINED HEREIN IS THE PROPRIETARY PROPERTY OF APPLE INC.
THE POSESSOR AGREES TO THE FOLLOWING:
I TO MAINTAIN THIS DOCUMENT IN CONFIDENCE
II NOT TO REPRODUCE OR COPY IT
III NOT TO REVEAL OR PUBLISH IT IN WHOLE OR PART
IV ALL RIGHTS RESERVED

POR BOMS - MLB-2 (1.7 GHZ CPU)

BOM NUMBER	BOM NAME	BOM OPTIONS
639-09104	MLB-2,SS-16GB,TS-256GB,X1782	ALT_CMN,ALTERNATE:PART,X1782_COMMON_BOM,X1782_CPU_1P7GHZ,X1782_16GB_SS,X1782_TLC_256GB_TS
639-09105	MLB-2,HY-16GB,TS-1TB,X1782	ALT_CMN,ALTERNATE:PART,X1782_COMMON_BOM,X1782_CPU_1P7GHZ,X1782_16GB_HY,X1782_TLC_001TB_TS
639-10042	MLB-2,SS-8GB,HY-128GB,X1782	ALT_CMN,ALTERNATE:PART,X1782_COMMON_BOM,X1782_CPU_1P7GHZ,X1782_08GB_SS,X1782_TLC_128GB_HY
639-10043	MLB-2,SS-8GB,TS-128GB,X1782	ALT_CMN,ALTERNATE:PART,X1782_COMMON_BOM,X1782_CPU_1P7GHZ,X1782_08GB_SS,X1782_TLC_128GB_TS
639-10044	MLB-2,HY-8GB,HY-128GB,X1782	ALT_CMN,ALTERNATE:PART,X1782_COMMON_BOM,X1782_CPU_1P7GHZ,X1782_08GB_HY,X1782_TLC_128GB_HY
639-10045	MLB-2,HY-8GB,TS-128GB,X1782	ALT_CMN,ALTERNATE:PART,X1782_COMMON_BOM,X1782_CPU_1P7GHZ,X1782_08GB_HY,X1782_TLC_128GB_TS
639-10046	MLB-2,SS-16GB,HY-128GB,X1782	ALT_CMN,ALTERNATE:PART,X1782_COMMON_BOM,X1782_CPU_1P7GHZ,X1782_16GB_SS,X1782_TLC_128GB_HY
639-10047	MLB-2,SS-16GB,TS-128GB,X1782	ALT_CMN,ALTERNATE:PART,X1782_COMMON_BOM,X1782_CPU_1P7GHZ,X1782_16GB_SS,X1782_TLC_128GB_TS
639-10048	MLB-2,HY-16GB,HY-128GB,X1782	ALT_CMN,ALTERNATE:PART,X1782_COMMON_BOM,X1782_CPU_1P7GHZ,X1782_16GB_HY,X1782_TLC_128GB_HY
639-10049	MLB-2,HY-16GB,TS-128GB,X1782	ALT_CMN,ALTERNATE:PART,X1782_COMMON_BOM,X1782_CPU_1P7GHZ,X1782_16GB_HY,X1782_TLC_128GB_TS
639-10050	MLB-2,SS-8GB,HY-256GB,X1782	ALT_CMN,ALTERNATE:PART,X1782_COMMON_BOM,X1782_CPU_1P7GHZ,X1782_08GB_SS,X1782_TLC_256GB_HY
639-10051	MLB-2,SS-8GB,SS-256GB,X1782	ALT_CMN,ALTERNATE:PART,X1782_COMMON_BOM,X1782_CPU_1P7GHZ,X1782_08GB_SS,X1782_TLC_256GB_SS
639-10052	MLB-2,SS-8GB,TS-256GB,X1782	ALT_CMN,ALTERNATE:PART,X1782_COMMON_BOM,X1782_CPU_1P7GHZ,X1782_08GB_SS,X1782_TLC_256GB_TS
639-10053	MLB-2,HY-8GB,HY-256GB,X1782	ALT_CMN,ALTERNATE:PART,X1782_COMMON_BOM,X1782_CPU_1P7GHZ,X1782_08GB_HY,X1782_TLC_256GB_HY
639-10054	MLB-2,HY-8GB,SS-256GB,X1782	ALT_CMN,ALTERNATE:PART,X1782_COMMON_BOM,X1782_CPU_1P7GHZ,X1782_08GB_HY,X1782_TLC_256GB_SS
639-10055	MLB-2,HY-8GB,TS-256GB,X1782	ALT_CMN,ALTERNATE:PART,X1782_COMMON_BOM,X1782_CPU_1P7GHZ,X1782_08GB_HY,X1782_TLC_256GB_TS
639-10056	MLB-2,SS-16GB,HY-256GB,X1782	ALT_CMN,ALTERNATE:PART,X1782_COMMON_BOM,X1782_CPU_1P7GHZ,X1782_16GB_SS,X1782_TLC_256GB_HY
639-10057	MLB-2,SS-16GB,SS-256GB,X1782	ALT_CMN,ALTERNATE:PART,X1782_COMMON_BOM,X1782_CPU_1P7GHZ,X1782_16GB_SS,X1782_TLC_256GB_SS
639-10058	MLB-2,HY-16GB,HY-256GB,X1782	ALT_CMN,ALTERNATE:PART,X1782_COMMON_BOM,X1782_CPU_1P7GHZ,X1782_16GB_HY,X1782_TLC_256GB_HY
639-10059	MLB-2,HY-16GB,SS-256GB,X1782	ALT_CMN,ALTERNATE:PART,X1782_COMMON_BOM,X1782_CPU_1P7GHZ,X1782_16GB_HY,X1782_TLC_256GB_SS
639-10060	MLB-2,HY-16GB,TS-256GB,X1782	ALT_CMN,ALTERNATE:PART,X1782_COMMON_BOM,X1782_CPU_1P7GHZ,X1782_16GB_HY,X1782_TLC_256GB_TS
639-10061	MLB-2,SS-8GB,HY-512GB,X1782	ALT_CMN,ALTERNATE:PART,X1782_COMMON_BOM,X1782_CPU_1P7GHZ,X1782_08GB_SS,X1782_TLC_512GB_HY
639-10062	MLB-2,SS-8GB,TS-512GB,X1782	ALT_CMN,ALTERNATE:PART,X1782_COMMON_BOM,X1782_CPU_1P7GHZ,X1782_08GB_SS,X1782_TLC_512GB_TS
639-10063	MLB-2,HY-8GB,HY-512GB,X1782	ALT_CMN,ALTERNATE:PART,X1782_COMMON_BOM,X1782_CPU_1P7GHZ,X1782_08GB_HY,X1782_TLC_512GB_HY
639-10064	MLB-2,HY-8GB,TS-512GB,X1782	ALT_CMN,ALTERNATE:PART,X1782_COMMON_BOM,X1782_CPU_1P7GHZ,X1782_08GB_HY,X1782_TLC_512GB_TS
639-10065	MLB-2,SS-16GB,HY-512GB,X1782	ALT_CMN,ALTERNATE:PART,X1782_COMMON_BOM,X1782_CPU_1P7GHZ,X1782_16GB_SS,X1782_TLC_512GB_HY
639-10066	MLB-2,SS-16GB,TS-512GB,X1782	ALT_CMN,ALTERNATE:PART,X1782_COMMON_BOM,X1782_CPU_1P7GHZ,X1782_16GB_SS,X1782_TLC_512GB_TS
639-10067	MLB-2,HY-16GB,HY-512GB,X1782	ALT_CMN,ALTERNATE:PART,X1782_COMMON_BOM,X1782_CPU_1P7GHZ,X1782_16GB_HY,X1782_TLC_512GB_HY
639-10068	MLB-2,HY-16GB,TS-512GB,X1782	ALT_CMN,ALTERNATE:PART,X1782_COMMON_BOM,X1782_CPU_1P7GHZ,X1782_16GB_HY,X1782_TLC_512GB_TS
639-10069	MLB-2,SS-8GB,HY-1TB,X1782	ALT_CMN,ALTERNATE:PART,X1782_COMMON_BOM,X1782_CPU_1P7GHZ,X1782_08GB_SS,X1782_TLC_001TB_HY
639-10070	MLB-2,SS-8GB,TS-1TB,X1782	ALT_CMN,ALTERNATE:PART,X1782_COMMON_BOM,X1782_CPU_1P7GHZ,X1782_08GB_SS,X1782_TLC_001TB_TS
639-10071	MLB-2,HY-8GB,HY-1TB,X1782	ALT_CMN,ALTERNATE:PART,X1782_COMMON_BOM,X1782_CPU_1P7GHZ,X1782_08GB_HY,X1782_TLC_001TB_HY
639-10072	MLB-2,HY-8GB,TS-1TB,X1782	ALT_CMN,ALTERNATE:PART,X1782_COMMON_BOM,X1782_CPU_1P7GHZ,X1782_08GB_HY,X1782_TLC_001TB_TS
639-10073	MLB-2,SS-16GB,HY-1TB,X1782	ALT_CMN,ALTERNATE:PART,X1782_COMMON_BOM,X1782_CPU_1P7GHZ,X1782_16GB_SS,X1782_TLC_001TB_HY
639-10074	MLB-2,SS-16GB,TS-1TB,X1782	ALT_CMN,ALTERNATE:PART,X1782_COMMON_BOM,X1782_CPU_1P7GHZ,X1782_16GB_SS,X1782_TLC_001TB_TS
639-10075	MLB-2,HY-16GB,HY-1TB,X1782	ALT_CMN,ALTERNATE:PART,X1782_COMMON_BOM,X1782_CPU_1P7GHZ,X1782_16GB_HY,X1782_TLC_001TB_HY
639-10076	MLB-2,SS-8GB,HY-2TB,X1782	ALT_CMN,ALTERNATE:PART,X1782_COMMON_BOM,X1782_CPU_1P7GHZ,X1782_08GB_SS,X1782_TLC_002TB_HY
639-10077	MLB-2,SS-8GB,WD-2TB,X1782	ALT_CMN,ALTERNATE:PART,X1782_COMMON_BOM,X1782_CPU_1P7GHZ,X1782_08GB_SS,X1782_TLC_002TB_WD
639-10078	MLB-2,HY-8GB,HY-2TB,X1782	ALT_CMN,ALTERNATE:PART,X1782_COMMON_BOM,X1782_CPU_1P7GHZ,X1782_08GB_HY,X1782_TLC_002TB_HY
639-10079	MLB-2,HY-8GB,WD-2TB,X1782	ALT_CMN,ALTERNATE:PART,X1782_COMMON_BOM,X1782_CPU_1P7GHZ,X1782_08GB_HY,X1782_TLC_002TB_WD
639-10080	MLB-2,SS-16GB,HY-2TB,X1782	ALT_CMN,ALTERNATE:PART,X1782_COMMON_BOM,X1782_CPU_1P7GHZ,X1782_16GB_SS,X1782_TLC_002TB_HY
639-10081	MLB-2,SS-16GB,WD-2TB,X1782	ALT_CMN,ALTERNATE:PART,X1782_COMMON_BOM,X1782_CPU_1P7GHZ,X1782_16GB_SS,X1782_TLC_002TB_WD
639-10082	MLB-2,HY-16GB,HY-2TB,X1782	ALT_CMN,ALTERNATE:PART,X1782_COMMON_BOM,X1782_CPU_1P7GHZ,X1782_16GB_HY,X1782_TLC_002TB_HY
639-10083	MLB-2,HY-16GB,WD-2TB,X1782	ALT_CMN,ALTERNATE:PART,X1782_COMMON_BOM,X1782_CPU_1P7GHZ,X1782_16GB_HY,X1782_TLC_002TB_WD

SYNC_MASTER= SYNC_DATE=

PAGE TITLE
BOM VARIANT TABLES

Apple Inc.

DRAWING NUMBER 051-05309 SIZE D
REVISION 6.0.0
BRANCH pvt
PAGE 406 OF 500
SHEET 95 OF 98

NOTICE OF PROPRIETARY PROPERTY:
THE INFORMATION CONTAINED HEREIN IS THE PROPRIETARY PROPERTY OF APPLE INC.
THE POSESSOR AGREES TO THE FOLLOWING:
I TO MAINTAIN THIS DOCUMENT IN CONFIDENCE
II NOT TO REPRODUCE OR COPY IT
III NOT TO REVEAL OR PUBLISH IT IN WHOLE OR PART
IV ALL RIGHTS RESERVED

POR BOMS - MLB-2 (1.7 GHZ CPU)

BOM NUMBER	BOM NAME	BOM OPTIONS
939-09001	DEV,MLB-1,NO-CPU-MEM-NAND,2-LAND,X1782	ALT_CMN,ALTERNATE:PART,X1782_COMMON_BOM,X1782_CPU_NO_CPU,X1782_NO_DRAM,X1782_NO_NAND_2_LD
939-09002	DEV,MLB-1,NO-CPU-MEM-NAND,4-LAND,X1782	ALT_CMN,ALTERNATE:PART,X1782_COMMON_BOM,X1782_CPU_NO_CPU,X1782_NO_DRAM,X1782_NO_NAND_4_LD

SYNC_MASTER= SYNC_DATE=

PAGE TITLE
BOM VARIANT TABLES

Apple Inc.

DRAWING NUMBER 051-05309
SIZE D
REVISION 6.0.0
BRANCH pvt
PAGE 407 OF 500
SHEET 96 OF 98

NOTICE OF PROPRIETARY PROPERTY:
THE INFORMATION CONTAINED HEREIN IS THE PROPRIETARY PROPERTY OF APPLE INC.
THE POSESSOR AGREES TO THE FOLLOWING:
I TO MAINTAIN THIS DOCUMENT IN CONFIDENCE
II NOT TO REPRODUCE OR COPY IT
III NOT TO REVEAL OR PUBLISH IT IN WHOLE OR PART
IV ALL RIGHTS RESERVED

DC-DC

PART NUMBER	ALTERNATE FOR PART NUMBER	BOM OPTION	REF DES	COMMENTS:	
152S00403	152S00322	ALT_CMN	ALL	<RDAR://39801983>	MURATA PRIMARY, CHILISIN ALT IND,PWR,0.68UH,20%,6.3A,26MOHM,3225
128S00042	128S0311	ALT_CMN	ALL	<RDAR://40172980>	NEC PRIMARY, KEMET ALTERNATE CAP,TANT,POLY,220UF,6.3V,25MOHM,82
128S00043	128S0311	ALT_CMN	ALL	<RDAR://40172980>	NEC PRIMARY, PANASONIC ALTERNATE CAP,TANT,POLY,220UF,6.3V,25MOHM,82
128S0264	128S0364	ALT_CMN	ALL	<RDAR://44394151>	KEMET PRIMARY, PANASONIC ALTERNATE CAP,AL,POLY,68UF,20%,16V,40MOHM,D2
152S00726	152S00592	ALT_CMN	ALL	<RDAR://40221857>	CYNTEC PRIMARY, CHILISIN ALTERNATE IND,MLD,1UH,2.6A,95MOHM,2012
152S00724	152S00311	ALT_CMN	ALL	<RDAR://40221450>	CYNTEC PRIMARY, CHILISIN ALTERNATE IND,MLD,1UH,20%,3.8A,55MOHM,2016X1.2MM
152S00398	152S00204	ALT_CMN	ALL	<RDAR://40221612>	CYNTEC PRIMARY, TAIYO ALTERNATE IND,PWR,SHLD,0.22UH,6.7A,0.023 OHM,2012
152S00725	152S00590	ALT_CMN	ALL	<RDAR://40223132>	CYNTEC PRIMARY, CHILISIN ALTERNATE IND,MLD,0.47UH,4.8A,34MOHM,2016
152S00363	152S00048	ALT_CMN	ALL	<RDAR://40040471>	CYNTEC PRIMARY, NEC ALTERNATE IND,MLD,0.22UH,1.9MO,44,8.6X8.0X2.4MM
376S00227	376S00203	ALT_CMN	ALL	<RDAR://40169831>	VISHAY PRIMARY, FAIRCHILD ALTERNATE MOSFET,DL-N,30V,15.6A,13.8MOHM@4.5V,DFN8
376S00204	376S00203	ALT_CMN	ALL	<RDAR://40169831>	VISHAY PRIMARY, DIODES ALTERNATE MOSFET,DL-N,30V,15.6A,13.8MOHM@4.5V,DFN8
376S00226	376S00203	ALT_CMN	ALL	<RDAR://40169831>	VISHAY PRIMARY, VISHAY ALTERNATE MOSFET,DL-N,30V,15.6A,13.8MOHM@4.5V,DFN8
152S00786	152S00344	ALT_CMN	ALL	<RDAR://40169331>	MURATA PRIMARY, CYNTEC ALTERNATE IND,MLD,1UH,20%,4.7A,40MOHM,2520
376S00373	376S1038	ALT_CMN	ALL	<RDAR://40169426>	TI PRIMARY, DIODES ALTERNATE MOFET DUAL-N,30V,20A,9.45/3.6MOHN,3X3DFN
376S00007	376S1179	ALT_CMN	ALL	<RDAR://40170031>	VISHAY PRIMARY, AOS ALTERNATE MOSFET,P-CH,20V,40A,0.0039 OHM,8P,PWRPAK
376S00228	376S1179	ALT_CMN	ALL	<RDAR://40170031>	VISHAY PRIMARY, FAIRCHILD ALTERNATE MOSFET,P-CH,20V,40A,0.0039 OHM,8P,PWRPAK
107S00015	107S00011	ALT_CMN	ALL	<RDAR://40039575>	CYNTEC PRIMARY, TFT ALTERNATE RES,MTL FLM,0.00075OHM,1%,4-L,0612,BLK
128S0392	128S0445	ALT_CMN	ALL	<RDAR://40172491>	PANASONIC PRIMARY, PANASONIC ALTERNATE CAP,TANT,POLY,33UF,20%,16V,40MOHM,D12
353S00831	353S00519	ALT_CMN	ALL	<RDAR://43065874>	VISHAY PRIMARY, FAIRCHILD ALTERNATE IC,SIC621,DR MOS,IMVP-8,60A,PQFN31,5X5MM

128S00039	128S00038	ALT_CMN	ALL	<RDAR://40173276>	KEMET PRIMARY, NEC ALT CAP,TA,POLY,150UF,20%,6.3V,18MO,2A,B2
128S0302	128S00038	ALT_CMN	ALL	<RDAR://40173276>	KEMET PRIMARY, PANASONIC ALT CAP,TA,POLY,150UF,20%,6.3V,18MO,2A,B2
353S00832	353S00525	ALT_CMN	ALL	<RDAR://43067934>	VISHAY PRIMARY, FAIRCHILD ALT IC,SIC532,DR MOS,IMVP-8,30A,PQFN22,45X35
152S01024	152S00386	ALT_CMN	ALL	<RDAR://42185308>	MURATA PRIMARY, CHILISIN ALT IND,MLD,1.0UH,20%,32MOHM,4.8A,3225
152S00707	152S00689	ALT_CMN	ALL	<RDAR://43666396>	CYNTEC PRIMARY, CHILISIN ALT IND,MLD,0.47UH,4.7MO,17.5A,5.6X5.2X2.4MM
376S00303	376S00012	ALT_CMN	ALL	<RDAR://43066124>	TI PRIMARY, DIODES ALT MOSFET DUAL-N,30V,15A,18/5.5MOHM,3X3DFN
376S00282	376S1128	ALT_CMN	ALL	<RDAR://43067686>	DIODES PRIMARY, ON SEMI ALT XSTR,FET,N-CH,30V,300MA,3P DFN
376S00224	376S1128	ALT_CMN	ALL	<RDAR://44187449>	DIODES PRIMARY, NEXPERIA ALT XSTR,FET,N-CH,30V,300MA,3P DFN
128S0578	128S0351	ALT_CMN	ALL	<RDAR://43396612>	SANYO PRIMARY, KEMET ALT CAP,TANT,POLY,330UF,2V,13MOHM,B2
128S00050	128S0351	ALT_CMN	ALL	<RDAR://43396612>	SANYO PRIMARY, NEC ALT CAP,TANT,POLY,330UF,2V,13MOHM,B2
152S00841	152S00238	ALT_CMN	ALL	<RDAR://44152899>	CYNTEC PRIMARY, CHILISIN ALT IND,MLD,0.56UH,7.2MO,16A,5.4X5.2X2.4MM
152S00765	152S00239	ALT_CMN	ALL	<RDAR://44155454>	CYNTEC PRIMARY, CHILISIN ALT IND,MLD,0.68UH,9.0MO,14.5A,5.4X5.2X2.4MM
138S00047	138S00073	ALT_CMN	ALL	<RDAR://44159571>	MURATA PRIMARY, TAIYO ALT CAP,X6S,10UF,20%,6.3V,HZTL,MUR,0402
131S00308	131S00037	ALT_CMN	ALL	<RDAR://44160572>	MURATA PRIMARY, YAGEO ALT CAP,CER,C0G,3300PF,5%,50V,0603
107S00087	107S00029	ALT_CMN	ALL	<RDAR://44206108>	TFT PRIMARY, YAGEO ALT RES,MTL FLM,0.005OHM,1%,4-L,0612,BLK
128S00026	128S00011	ALT_CMN	ALL	<RDAR://44202728>	KEMET PRIMARY, NEC ALT CAP,TANT,POLY,6.8UF,20%,35V,90MOHM,B1.2
128S00087	128S00011	ALT_CMN	ALL	<RDAR://44202728>	KEMET PRIMARY, PANASONIC ALT CAP,TANT,POLY,6.8UF,20%,35V,90MOHM,B1.2
128S00031	128S00011	ALT_CMN	ALL	<RDAR://44202728>	KEMET PRIMARY, ROHM ALT CAP,TANT,POLY,6.8UF,20%,35V,90MOHM,B1.2
107S00076	107S00044	ALT_CMN	ALL	<RDAR://44205141>	CYNTEC PRIMARY, YAGEO ALT RES,MF,0.010 OHM,0.5%,0612-4T,BLK
152S00368	152S00269	ALT_CMN	ALL	<RDAR://44243170>	CYNTEC PRIMARY, TOKIN ALT IND,MLD,1.0UH,20%,14A,10.7MO,6.6X6.6X2.4
152S00800	152S00268	ALT_CMN	ALL	<RDAR://44244361>	CYNTEC PRIMARY, NEC-TOKIN ALT IND,MLD,1.5UH,20%,12.5A,17.0MO,7.0X6.6MM
138S00084	138S00060	ALT_CMN	ALL	<RDAR://44320030>	138S00060 PRIMARY, 138S00084 ALT CAP,CER,47UF,20%,6.3V,X5R,0603
138S0789	138S0941	ALT_CMN	ALL	<RDAR://44323944>	MURATA PRIMARY, SAMSUNG ALT CAP,CER,2.2UF,20%,25V,X5R,HRZTL,0402,MUR
138S00104	138S0978	ALT_CMN	ALL	<RDAR://44325053>	MURATA PRIMARY, TAIYO ALT CAP,CER,2.2UF,20%,25V,X5R,0402,H=0.55MM
152S00383	152S00198	ALT_CMN	ALL	<RDAR://44325096>	CYNTEC PRIMARY, VISHAY ALT IND,MLD,2.7UH,19.6MO,12.5A,10.9X10X2.4MM
152S00680	152S00198	ALT_CMN	ALL	<RDAR://44325096>	CYNTEC PRIMARY, CHILISIN ALT IND,MLD,2.7UH,19.6MO,12.5A,10.9X10X2.4MM
138S0863	138S0853	ALT_CMN	ALL	<RDAR://44326703>	MURATA PRIMARY, TAIYO YUDEN ALT CAP,CER,15UF,20%,2V,X6S,0402,MURATA
138S00229	138S00107	ALT_CMN	ALL	<RDAR://44362824>	MURATA PRIMARY, KYOCERA ALT CAP,X5R,20UF,20%,10V,0402,H=0.8MM
138S0786	138S0705	ALT_CMN	ALL	<RDAR://44321492>	MURATA PRIMARY, SAMSUNG ALT CAP,CER,X5R,10UF,20%,10V,0402
138S0746	138S0705	ALT_CMN	ALL	<RDAR://44321492>	MURATA PRIMARY, TAIYO YUDEN ALT CAP,CER,X5R,10UF,20%,10V,0402
107S0249	107S0251	ALT_CMN	ALL	<RDAR://44364242>	CYNTEC PRIMARY,TFT ALT RES,SENSE,0.002OHM,1W,4-TERM,1%,0612,CYN
132S00012	132S0401	ALT_CMN	ALL	<RDAR://44325754>	TAIYO YUDEN PRIMARY,MURATA ALT CAP,CER,0.22UF,10%,25V,X7R,0402
138S00077	138S00035	ALT_CMN	ALL	<RDAR://44363047>	MURATA PRIMARY,TAIYO ALT CAP,CER,20UF,20%,2.5V,X6S,HRZTL,0402
138S00093	138S00035	ALT_CMN	ALL	<RDAR://44363047>	MURATA PRIMARY,KYOCERA ALT CAP,CER,20UF,20%,2.5V,X6S,HRZTL,0402
132S00064	132S0409	ALT_CMN	ALL	<RDAR://44325817>	TAIYO PRIMARY,MURATA ALT CAP,CER,X6S,0.1UF,20%,16V,0201
371S00220	371S00181	ALT_CMN	ALL	<RDAR://44622207>	DIODES PRIMARY,ON SEMI ALT DIODE,ZENER,5.6V,250MW,DFN0201
152S01023	152S00384	ALT_CMN	ALL	<RDAR://44622443>	MURATA PRIMARY, CHILISIN ALT IND,MLD,0.48UH,20%,23MOHM,6.7A,3225
138S00015	138S0777	ALT_CMN	ALL	<RDAR://44658436>	MURATA PRIMARY, TAIYO YUDEN AND SAMSUNG ALT CAP,CER,10UF,20%,16V,X6S,0603
103S0321	103S0276	ALT_CMN	ALL	<RDAR://44660673>	CYNTEC PRIMARY, YAGEO ALT RES,MF,4.42K OHM,1/20W,0.1%,0201,SMD
107S00139	107S0178	ALT_CMN	ALL	<RDAR://44693560>	MURATA PRIMARY, PANASONIC ALT THERMISTOR,NTC,220K OHM,4485K,3%,0201
353S02017	353S00525	ALT_CMN	ALL	<RDAR://52858660>	VISHAY PRIMARY, AOS ALT IC,SIC532,DR MOS,IMVP-8,30A,PQFN22,45X35
353S02065	353S00525	ALT_CMN	ALL	<RDAR://52858660>	VISHAY, LOWER COST AS ALT IC,SIC532,DR MOS,IMVP-8,30A,PQFN22,45X35
353S02064	353S00525	ALT_CMN	ALL	<RDAR://52858660>	VISHAY, LOWER COST AS ALT IC,SIC532,DR MOS,IMVP-8,30A,PQFN22,45X35
353S02192	353S00519	ALT_CMN	ALL	<RDAR://52921454>	VISHAY, LOWER COST AS ALT IC,SIC621,DR MOS,IMVP-8,60A,PQFN31,5X5MM
128S0436	128S0445	ALT_CMN	ALL	<RDAR://54142831>	PANASONIC PRIMARY,KEMET AS ALT CAP, TANT,POLY,33UF,20%,16V,40MOHM,D12
128S00109	128S00041	ALT_CMN	ALL		JAPAN ONLY PRIMARY, DUAL FLOW AS ALT CAP,AL,POLY,220UF,20%,2V,2.5MOHM,6A,D1

SYSTEM EE

PART NUMBER	ALTERNATE FOR PART NUMBER	BOM OPTION	REF DES	COMMENTS:	
376S1080	376S0820	ALT_CMN	ALL	<RDAR://42561814>	ON SEMI PRIMARY, DIODES ALT XSTR,FET,DUAL COMP,20V,220/200MA,SOT963
353S01505	353S01389	ALT_CMN	ALL	<RDAR://42641759>	TI PRIMARY, ON SEMI ALT IC INA210A,CURRENT SENSE,200V/V,QFN10
353S01041	353S01042	ALT_CMN	ALL	<RDAR://42672116>	TI PRIMARY, ST MICRO ALT IC,REF3312,V-REF,1.25V,0.15%,5MA,QFN8
376S00146	376S1061	ALT_CMN	ALL	<RDAR://42560905>	DIODES PRIMARY, ROHM ALT XSTR,FET,P-CH,30V,400MA,ENH MODE,SOT883
371S00190	371S00085	ALT_CMN	ALL	<RDAR://42639806>	ON SEMI PRIMARY, DIODES ALT DIODE SCHOTTKY,40V,2A,LOW VF,0603
353S00750	353S00877	ALT_CMN	ALL	<RDAR://42677730>	ON SEMI PRIMARY, TI ALT IC,NCP160,LDO REG,1.8V,0.25A,XDFN5
353S01506	353S01404	ALT_CMN	ALL	<RDAR://42641429>	TI PRIMARY, ON SEMI ALT IC,INA214A,CURRENT SENSE,100V/V,QFN10
335S00213	335S0888	ALT_CMN	ALL	<RDAR://43152541>	ST PRIMARY, ON SEMI ALT IC,SERIAL I2C EEPROM,128KBIT,8P,MLP8
353S00636	353S4037	ALT_CMN	ALL	<RDAR://42639994>	DIODES PRIMARY, NXP ALT IC,PI3USB102E,DIFF.USB SW,SPDT,TQFN-10
377S00060	377S0183	ALT_CMN	ALL	<RDAR://56761205>	INFINEON PRIMARY, STM ALT TVS,DIODE,BIDIR,1LINE,22V,11.5PF,0201
353S00878	353S00599	ALT_CMN	ALL	<RDAR://43151782>	ON SEMI PRIMARY, TI ALT IC,NCP160,LDO REG,3.0V,0.25A,DFN4
311S00138	311S0436	ALT_CMN	ALL	<RDAR://43152801>	TI PRIMARY, NXP ALT IC,74AVC4T245,4BIT VOLT TRANSLATOR,QFP16
311S00060	311S0273	ALT_CMN	ALL	<RDAR://43153429>	PHILLIPS PRIMARY, DIODES ALT IC,74LVC1G32,SNGL 2-INPT OR GATE,SOT891
353S4376	353S3384	ALT_CMN	ALL	<RDAR://43953240>	TI PRIMARY, ON SEMI ALT IC,LMV331,COMP,OPEN COL,2.7V,60UA,SC70
311S0426	311S00007	ALT_CMN	ALL	<RDAR://43955202>	DIODES PRIMARY, NXP ALT IC,74LVC1G07,SNGL BFR W/OD OUT,DFN,6P
311S00192	311S00191	ALT_CMN	ALL	<RDAR://43955903>	DIODES PRIMARY, NEXPERIA ALT IC,74LVC1G07,SNGL BFR W/OD OUT,DFN,6P
107S0211	107S0210	ALT_CMN	ALL	<RDAR://44198222>	ROHM PRIMARY, VISHAY ALT RES,MTL,.005 OHM,1%,1W,1206
335S00270	335S00203	ALT_CMN	ALL	<RDAR://43152675>	MACRONIX PRIMARY, ADESTO ALT IC,FLASH,SERIAL,SPI,4MX8,1.8V,4X3MM,DFN8
138S00086	138S0884	ALT_CMN	ALL	<RDAR://44320169>	MURATA PRIMARY, TAIYO ALT CAP,CER,X5R,20UF,20%,6.3V,0402,H=0.7MM
138S0714	138S0713	ALT_CMN	ALL	<RDAR://44325434>	MURATA PRIMARY, SAMSUNG ALT CAP,CER,10UF,6.3V,X5R,0.7MM,0402,SAMSUNG
138S0715	138S0732	ALT_CMN	ALL	<RDAR://44325464>	MURATA PRIMARY, SAMSUNG ALT CAP,CER,X5R,1UF,10%,10V,0402,MURATA
138S00111	138S00036	ALT_CMN	ALL	<RDAR://44325659>	MURATA PRIMARY, TAIYO YUDEN ALT CAP,CER,20UF,20%,2.5V,X6S,LOW NOISE,0402
132S00176	132S0640	ALT_CMN	ALL	<RDAR://44325857>	MURATA PRIMARY, YAGEO ALT CAP,CER,0.047UH,10%,50V,X7R,0402
311S0596	311S0593	ALT_CMN	ALL	<RDAR://44345963>	NXP PRIMARY, TI ALT IC,VOLT-LEVEL TRANS,W/CONFIG GATE,SOT886
311S00156	311S00129	ALT_CMN	ALL	<RDAR://44347874>	TI PRIMARY, NEXPERIA ALT IC,XCVR,BUS,4-BIT,DL SPPLY,3-OUT,UQFN16
311S00013	311S0508	ALT_CMN	ALL	<RDAR://44348000>	NEXPERIA PRIMARY, DIODES ALT IC,74AUP1G07,SNGL BUFFER W/OD OUT,SOT891
152S00434	152S1829	ALT_CMN	ALL	<RDAR://44363291>	TDK PRIMARY, CYNTEC ALT IND,PWR,MULT,1UH,20%,0.4A,0.636 OHM,0402
155S00166	155S0391	ALT_CMN	ALL	<RDAR://44364823>	MURATA PRIMARY, TDK ALT FERR BD,220 OHM,25%,700MA,0.28 DCR,0402
155S0660	155S0513	ALT_CMN	ALL	<RDAR://44364960>	TDK PRIMARY, MURATA ALT FERR BD,22 OHM,25%,1A,55 MOHM DCR,0201
155S00018	155S0664	ALT_CMN	ALL	<RDAR://44365105>	MURATA PRIMARY, TAIYO ALT FERR BD,80 OHM,25%,500MA,0.18 DCR,0201
155S00007	155S0667	ALT_CMN	ALL	<RDAR://44365462>	PANASONIC PRIMARY, TAIYO ALT FLTR,COMMON MODE,90 OHM,100MA,0202
311S0562	311S0372	ALT_CMN	ALL	<RDAR://43153066>	NXP PRIMARY, TI ALT IC,VOLT-LEVEL TRANS,W/CONFIG GATE,SOT891
138S00117	138S00071	ALT_CMN	ALL	<RDAR://44325102>	MURATA PRIMARY, KYOCERA ALT CAP,CER,X5R,4UF,20%,6.3V,0201,T=0.55MM
155S0914	155S0897	ALT_CMN	ALL	<RDAR://44391467>	TDK PRIMARY, PANASONIC ALT FLTR,NOISE,2.4GHZ,0.1A,0.65X0.5MM,SMD4
155S00190	155S0897	ALT_CMN	ALL	<RDAR://44391467>	TDK PRIMARY, TAIYO YUDEN ALT FLTR,NOISE,2.4GHZ,0.1A,0.65X0.5MM,SMD4
197S00053	197S00050	ALT_CMN	ALL	<RDAR://44391613>	TXC PRIMARY, KYOCERA ALT XTAL,24MHZ,10PPM,8PF,40 OHM,2520
197S00054	197S00050	ALT_CMN	ALL	<RDAR://44391613>	TXC PRIMARY, NDK ALT XTAL,24MHZ,10PPM,8PF,40 OHM,2520
377S00079	377S00077	ALT_CMN	ALL	<RDAR://44391888>	ST MICRO PRIMARY, DIODES ALT TVS,DIODE,UNIDIR,22V,35A,1.6X1.0
377S0077	377S0183	ALT_CMN	ALL	<RDAR://44392851>	INFINEON PRIMARY, ST ALT SUPPR,TRANS,BIDIR,5.5V,6.2PF,0201
311S0271	311S00008	ALT_CMN	ALL	<RDAR://43955521>	DIODES PRIMARY, NXP ALT IC,74LVC1G08,SNGL 2-INPT AND GATE,DFN,6P

155S0694	155S0387	ALT_CMN	ALL	<RDAR://44363691>	TDK PRIMARY, MURATA ALT FERRITE BEAD,470OHM,0.1A,1.5MOHM DCR,060
138S1103	138S0719	ALT_CMN	ALL	<RDAR://44325533>	MURATA PRIMARY, TY ALT CAP,CER,X5R,4.7UF,20%,10V,0402,MURATA
138S0660	138S0684	ALT_CMN	ALL	<RDAR://44325201>	MURATA PRIMARY, TAIYO ALT CAP,CER,10UF,20%,10V,X5R,0603,MURATA
311S00104	311S00091	ALT_CMN	ALL	<RDAR://44346512>	ON SEMI PRIMARY, TI ALT IC,NLSX4402,2BIT DUAL LEVEL XLATOR,DFN8
107S00016	107S0118	ALT_CMN	ALL	<RDAR://44358912>	VISHAY PRIMARY, ROHM ALT RES,FILM,0.001 OHM,1W,1%,1206
138S0914	138S00109	ALT_CMN	ALL	<RDAR://44363107>	KYOCERA PRIMARY, MURATA ALT CAP,X5R,2.2UF,20%,6.3V,0201,0.35MM,KYO
138S00049	138S0831	ALT_CMN	ALL	<RDAR://44621837>	MURATA PRIMARY, KYOCERA ALT CAP,CER,X5R,2.2UF,20%,6.3V,0201
103S00250	103S00249	ALT_CMN	ALL	<RDAR://44623255>	MURATA PRIMARY, YAGEO ALT RES,TK,18.2 KOHM,0.1%,TOPPM,1/20W,0201
103S00248	103S00247	ALT_CMN	ALL	<RDAR://44623345>	CYNTEC PRIMARY, YAGEO ALT RES,TK,8.06 KOHM,0.1%,50PPM,1/20W,0201
376S1137	376S00019	ALT_CMN	ALL	<RDAR://44620634>	DIODES PRIMARY, VISHAY ALT XSTR,FET,N-CH,20V,4.5A,40MOHM,BGA4
138S0750	138S00097	ALT_CMN	ALL	<RDAR://44622531>	TAYIO YUDEN PRIMARY, MURATA ALT CAP,CER,4.7UF,20%,6.3V,X6S,TY,0402

353S01346	353S01320	ALT_CMN	ALL	<RDAR://43953321>	NXP PRIMARY, ONSEMI ALT IC,NX3DV642,3-LANE HS SW,TPDT,XQFN24
197S00048	197S00036	ALT_CMN	ALL	<RDAR://44391564>	TXC PRIMARY, KYOCERA ALT XTAL,25MHZ,25PPM,20PF,50OHM,500UW,2016
376S00332	376S00074	ALT_CMN	ALL	<RDAR://44620855>	TOSHIBA PRIMARY, NEXPERIA ALT MOSFET,DUAL N-CH30V,100MA,6P SOT563
740S00028	740S0118	ALT_CMN	ALL	<RDAR://44393058>	POLYTRONICS PRIMARY, BUSSMAN ALT FUSE,12A,32V,1206,FAST ACTING,SMD
138S00056	138S1100	ALT_CMN	ALL	<RDAR://44319895>	MURATA PRIMARY, TAIYO ALT CAP,CER,3-TERM,9.1UF,20%,4V,H0.7MM,0402
155S0665	155S00232	ALT_CMN	ALL	<RDAR://44363532>	TDK PRIMARY, MURATA ALT FERR BD,120 OHMZ,25%,480MA,0.21 OHM,0201
197S00120	197S00118	ALT_CMN	ALL	<RDAR://44391668>	TXC PRIMARY, EPSON ALT XTAL,24MHZ,30PPM,9.5PF,60 OHM MAX,1612
311S00133	311S00130	ALT_CMN	ALL	<RDAR://44396487>	NXP PRIMARY, DIODES ALT IC,74AVC1T45,XCVR,DL SUPPLY,1BIT,SON-6
107S00086	107S00056	ALT_CMN	ALL	<RDAR://44358149>	CYNTEC PRIMARY, TFT ALT RES,SENSE,0.003 OHM,1%,1/2W,0306-4T
311S00121	311S0398	ALT_CMN	ALL	<RDAR://43152868>	NXP PRIMARY, DIODES ALT IC,74AUP1G08,2-INPUT AND GATE,SOT891
107S00100	107S00057	ALT_CMN	ALL	<RDAR://44358232>	CYNTEC PRIMARY, TFT ALT RES,MF,0.002 OHM,1%,1/2W,0306-4T
107S00033	107S00034	ALT_CMN	ALL	<RDAR://44349741>	CYNTEC PRIMARY, TFT ALT RES,MF,0.025 OHM,1%,0612-4T,BLK

SYSTEM EE

PART NUMBER	ALTERNATE FOR PART NUMBER	BOM OPTION	REF DES	COMMENTS:	
155S00067	155S00401	ALT_CMN	ALL	<RDAR://44653410>	MURATA PRIMARY, TDK ALT FERR BD,240 OHM,25%,350MA,0.38 DCR,0201
138S0706	138S0739	ALT_CMN	ALL	<RDAR://44621676>	SAMSUNG PRIMARY, MURATA ALT CAP,CER,X5R,1UF,20%,10V,0201,SAMSUNG
138S0945	138S0739	ALT_CMN	ALL	<RDAR://44621676>	SAMSUNG PRIMARY, KYOCERA ALT CAP,CER,X5R,1UF,20%,10V,0201,SAMSUNG
152S00864	152S00851	ALT_CMN	ALL	<RDAR://44652690>	TDK PRIMARY, CYNTEC ALT IND,MULT,1.2UH,20%,120MA,1.17 OHM,0402
138S00181	138S0835	ALT_CMN	ALL	<RDAR://44621938>	MURATA PRIMARY, SAMSUNG ALT CAP,CER,3-TERM,4.3UF,20%,4V,0402
371S00185	371S00193	ALT_CMN	ALL	<RDAR://44610883>	ROHM PRIMARY, TOSHIBA ALT DIODE,SCHOTTKY,30V,100MA,0201
311S00196	311S00195	ALT_CMN	ALL	<RDAR://46735900>	DIODES PRIMARY, NEXPERIA ALT IC,74LVC1G08,SNGL 2-INPT AND G,DFN1410-6
377S00123	377S00031	ALT_CMN	ALL	<RDAR://44391823>	ON SEMI PRIMARY, SEMTECH ALT DIODE,TVS,5.5V,7.3VBR,0.2PF,0201
376S00292	376S00294	ALT_CMN	ALL	<RDAR://43910260>	DIODES PRIMARY, NEXPERIA ALT NFET,20V,1.35A,0.18 OHM,DFN3
107S00346	107S00116	ALT_CMN	ALL	<RDAR://46676880>	CYNTEC PRIMARY, YAGEO ALT RES,MF,0.10 OHM,1%,0.5W,150PPM,0603-4T
311S0525	311S0532	ALT_CMN	ALL	<RDAR://48407305>	TI PRIMARY, NXP ALT IC,SNGL 3-STATE BUFFER,6-PIN,DFN
116S00007	116S00006	ALT_CMN	ALL	<RDAR://48412393>	YAGEO PRIMARY, VISHAY ALT RES,MTL FILM,0 OHM,TIGHT TOL,3A,0402
107S0284	107S00021	ALT_CMN	ALL	<RDAR://48411982>	CYNTEC PRIMARY, TFT ALT RES,SENSE,0.020 OHM,1%,1/3W,0306-4T
107S0276	107S00020	ALT_CMN	ALL	<RDAR://48407669>	TAGEO PRIMARY, TFT ALT RES,SENSE,0.010 OHM,1/3W,4-TERM,1%,0306
132S00229	132S00010	ALT_CMN	ALL	<RDAR://53023881>	MURATA PRIMARY, TAIYO ALT CAP,CER,X5R,0.1UF,10%,35V,0201
377S00166	377S00106	ALT_CMN	ALL	<RDAR://53024719>	ONSIME PRIMARY, SEMTECH ALT TVS,DIODE,1VRWM,2.3VBR,0.2PF,0201
107S00101	107S00005	ALT_CMN	ALL	<RDAR://53024863>	YAGEO PRIMARY, CYNTEC ALT RES,SENSE,0.005OHM,1/3W,1%,100PPM,0306
138S0852	138S0818	ALT_CMN	ALL	<RDAR://53109945>	MURATA PRIMARY, SAMSUNG ALT CAP;CER,0.68UF,5%,6.3V,X6S,0402
152S00812	152S1701	ALT_CMN	ALL	<RDAR://53229916>	CYNTEC PRIMARY, CHILISIN ALT IND;PWR,10UH,20%,1.6A,150MOHM,4040X1.8MM
138S00087	138S1086	ALT_CMN	ALL	<RDAR://53229099>	MURATA PRIMARY, TAIYO ALT CAP,X5R,2.2UF,10%,50V,0603
353S01615	353S4160	ALT_CMN	ALL	<RDAR://53453766>	TI-MAINE PRIMARY, TI-AIZU ALT IC,LP8548B1-04,DC/DC CVTR,BOOST,QFN24
107S00297	107S00344	ALT_CMN	ALL	<RDAR://56910244>	MURATA PRIMARY, MURATA ALT THERMISTOR,NTC,100KOHM,1%,0.10MA,0201

H9M

PART NUMBER	ALTERNATE FOR PART NUMBER	BOM OPTION	REF DES	COMMENTS:	
339S00387	339S00386	ALT_CMN	ALL	<RDAR://41988491>	MICRON SCK PRIMARY, HYNIX SCK ALT POP,GIBRALTAR+1GB,20NM,M,DEV,SCK,CSP1122
339S00390	339S00386	ALT_CMN	ALL	<RDAR://41988491>	MICRON SCK PRIMARY, MICRON ATK ALT POP,GIBRALTAR+1GB,20NM,M,DEV,SCK,CSP1122
339S00391	339S00386	ALT_CMN	ALL	<RDAR://41988491>	MICRON SCK PRIMARY, HYNIX ATK ALT POP,GIBRALTAR+1GB,20NM,M,DEV,SCK,CSP1122
339S00389	339S00388	ALT_CMN	ALL	<RDAR://41988491>	MICRON SCK PRIMARY, HYNIX SCK ALT POP,GIBRALTAR+2GB,20NM,M,DEV,SCK,CSP1122
339S00392	339S00388	ALT_CMN	ALL	<RDAR://41988491>	MICRON SCK PRIMARY, MICRON ATK ALT POP,GIBRALTAR+2GB,20NM,M,DEV,SCK,CSP1122
339S00393	339S00388	ALT_CMN	ALL	<RDAR://41988491>	MICRON SCK PRIMARY, HYNIX ATK ALT POP,GIBRALTAR+2GB,20NM,M,DEV,SCK,CSP1122
339S00602	339S00601	ALT_CMN	ALL	<RDAR://41988491>	MICRON SCK PRIMARY, HYNIX SCK ALT POP,GIBRALTAR_L+1GB,16NM,M,B0,SCK,C1122
339S00603	339S00601	ALT_CMN	ALL	<RDAR://41988491>	MICRON SCK PRIMARY, MICRON ATK ALT POP,GIBRALTAR_L+1GB,16NM,M,B0,SCK,C1122
339S00604	339S00601	ALT_CMN	ALL	<RDAR://41988491>	MICRON SCK PRIMARY, HYNIX ATK ALT POP,GIBRALTAR_L+1GB,16NM,M,B0,SCK,C1122
339S00606	339S00605	ALT_CMN	ALL	<RDAR://41988491>	MICRON SCK PRIMARY, HYNIX SCK ALT POP,GIBRALTAR_L+2GB,16NM,M,B0,SCK,C1122
339S00607	339S00605	ALT_CMN	ALL	<RDAR://41988491>	MICRON SCK PRIMARY, MICRON ATK ALT POP,GIBRALTAR_L+2GB,16NM,M,B0,SCK,C1122
339S00608	339S00605	ALT_CMN	ALL	<RDAR://41988491>	MICRON SCK PRIMARY, HYNIX ATK ALT POP,GIBRALTAR_L+2GB,16NM,M,B0,SCK,C1122

BACKLIGHT

PART NUMBER	ALTERNATE FOR PART NUMBER	BOM OPTION	REF DES	COMMENTS:	
138S0738	138S1101	ALT_CMN	ALL	<RDAR://42360480>	MURATA PRIMARY, SAMSUNG ALT CAP,CER,2.2UF,10%,100V,X5R,1206,T:0.95MM
138S0846	138S0811	ALT_CMN	ALL	<RDAR://42360480>	MURATA PRIMARY, SAMSUNG ALT CAP,CER,4.7UF,10%,25V,X6S,0603
376S1053	376S0604	ALT_CMN	ALL	<RDAR://42360480>	FAIRCHILD PRIMARY, DIODES ALT XSTR,FET,P-CH,20V,4.5A,0.043 OHM,SS0T6
152S00359	152S00253	ALT_CMN	ALL	<RDAR://42360480>	CYNTEC PRIMARY, CHILISIN ALT IND,PWR,MLD,15UH,20%,1.9A,240MO,7368X24M
740S00041	740S0159	ALT_CMN	ALL	<RDAR://42360480>	LITTLEFUSE PRIMARY, BOURNS ALT FUSE,HIGH INRUSH,32V,3A,0603
371S00077	371S00180	ALT_CMN	ALL	<RDAR://42360480>	DIOES PRIMARY, NXP ALT DIODE,SCHOTTKY,100V,2A,SOD123
376S1106	376S0678	ALT_CMN	ALL	<RDAR://42360480>	VISHAY PRIMARY, FAIRCHILD ALT XSTR,MSFT,N-CH,75V,16A,0.046 OHM
371S00217	371S00079	ALT_CMN	ALL	<RDAR://53230880>	NXP PRIMARY, ROHM ALT DIODE,SCHOTKY,60V,1A,SOD123

WIFI

PART NUMBER	ALTERNATE FOR PART NUMBER	BOM OPTION	REF DES	COMMENTS:	
339S00632	339S00616	ALT_CMN	ALL	<RDAR://58091255>	MUR PRIMARY, USI ALT MODULE,WIFI/BT,SAPPORO,ES3.1,M,LGA451
339S00750	339S00616	ALT_CMN	ALL	<RDAR://58091255>	MUR PRIMARY, USI ALT MODULE,WIFI/BT,SAPPORO,ES3.3,M,LGA451

AUDIO

PART NUMBER	ALTERNATE FOR PART NUMBER	BOM OPTION	REF DES	COMMENTS:	
128S00009	128S00093	ALT_CMN	ALL	<RDAR://53110517>	TOKIN PRIMARY, KEMET ALT CAP TANT POLY,33UF,20%,16V,55MO,1.6A,B12
128S00103	128S00093	ALT_CMN	ALL	<RDAR://53110517>	TOKIN PRIMARY, SEMCO ALT CAP TANT POLY,33UF,20%,16V,55MO,1.6A,B12
155S00034	155S0706	ALT_CMN	ALL	<RDAR://53110248>	TAIYO PRIMARY, MURATA ALT FERR BD,120OHM,25%,1.3A,0.07DCR,0402

SYNC_DATE=

SYNC_MASTER=

RULER_RULE_SET=RIGID_2016 — MANUFACTURING CONFIGURATION — TABLE_REV_NUMBER=1

DIELECTRIC BASED SPACING RULES				DEFAULT SPACING MULTIPLES	VOID SPACE RATIO
MULTIPLES	SMDPIN MAX(UM)	MVIA MAX(UM)	SMDPIN2SMDPIN MAX(UM)		
1,2,3,4,5,6,7,8,9,10,11,12,13,14	120	120	100	1	2

	LAYERS	MINIMUM CU WIDTH RATIO	MINIMUM CU SPACING RATIO	MINIMUM TO DEFAULT RATIO
SIGNAL 1/3 OZ, PLATED TO 0.031 MM	TOP,BOTTOM	2.0	2.36842	1.2
GND PLANE 1/3 OZ, PLATED TO 0.020 MM	ISL2,ISL13	2.25	2.5	1.2
SIGNAL 1/3 OZ, PLATED TO 0.030 MM	ISL3,ISL12	2.0	2.25806	1.2
GND PLANE 1/2 OZ, 0.016 MM	ISL4,ISL11	2.5	2.5	1.2
SIGNAL 1/2 OZ, 0.016 MM	ISL5,ISL10	2.5	2.5	1.2
GND PLANE 1/2 OZ, 0.016 MM	ISL6,ISL9	2.5	2.5	1.2
POWER PLANE 1 OZ, 0.031 MM	ISL7,ISL8	2.0	2.25806	1.2

MANUAL EDITS AFTER AUTOGENERATION:
OVERWROTE THROUGH VIA, BB VIA, AND UVIA SPACINGS TO DEFAULT VALUE, THE AUTOGEN ONES ARE TOO HIGH
UPDATE SAME NET SPACING FOR VIA TO HOLE, UVIA TO SMD PIN, FOR DEFAULT AND MIN, TO -1
CHANGED LINE TO SMD SAME NET SPACING FROM 0.1 TO 0.07 ON TOP/BOTTOM LAYERS
CHANGED MAX NECK LENGTH FOR THE DEFAULT PHYSICAL RULE TO 20MM
CHANGED UVIA TO LINE SAME NET SPACING TO 0.05
CHANGED BB VIA TO LINE, ABD BB VIA TO BB VIA SAME NET SPACING TO 0.0
CHANGED BB VIA TO UVIA SAME NET SPACING TO -1
CHANGED LINE TO SHAPE SAME NET SPACING TO 0.05
SET BB VIA STAGGER IN PHYSICAL RULES TO 0.2500 FOR MIN, 0.275 FOR ALL OTHER, FOR LAYERS 3 AND 12
COPIED THE RULES FROM 85 OHM DIFF TO 85 MIN STAGGER
SET ENABLE DRC BY LAYER IN SAME NET SPACING TO TRUE FOR ALL LAYERS
KEEP DEFAULT AS DEFAULT, GENERIC DP AS GENERIC DP
REPLACING ALL SPACINGS EXCEPT LINE TO LINE WITH DEFAULT VALUES
DECREASED NECK GAP FOR DIFF PAIRS TO VALUE FOR GENERIC DP
REASSIGN SPACING AND PHYSICAL REGION RULES AND NET CLASS ASSIGNMENTS
SET UVIA TO SHAPE SAME NET SPACING TO 0.1MM ON TOP/BOTTOM

SYNC_MASTER= SYNC_DATE=

PAGE TITLE
BOARD RULES

Apple Inc.

DRAWING NUMBER 051-05309 SIZE D
REVISION 6.0.0
BRANCH pvt
PAGE 500 OF 500
SHEET 98 OF 98

NOTICE OF PROPRIETARY PROPERTY:
THE INFORMATION CONTAINED HEREIN IS THE PROPRIETARY PROPERTY OF APPLE INC.
THE POSESSOR AGREES TO THE FOLLOWING:
I TO MAINTAIN THIS DOCUMENT IN CONFIDENCE
II NOT TO REPRODUCE OR COPY IT
III NOT TO REVEAL OR PUBLISH IT IN WHOLE OR PART
IV ALL RIGHTS RESERVED

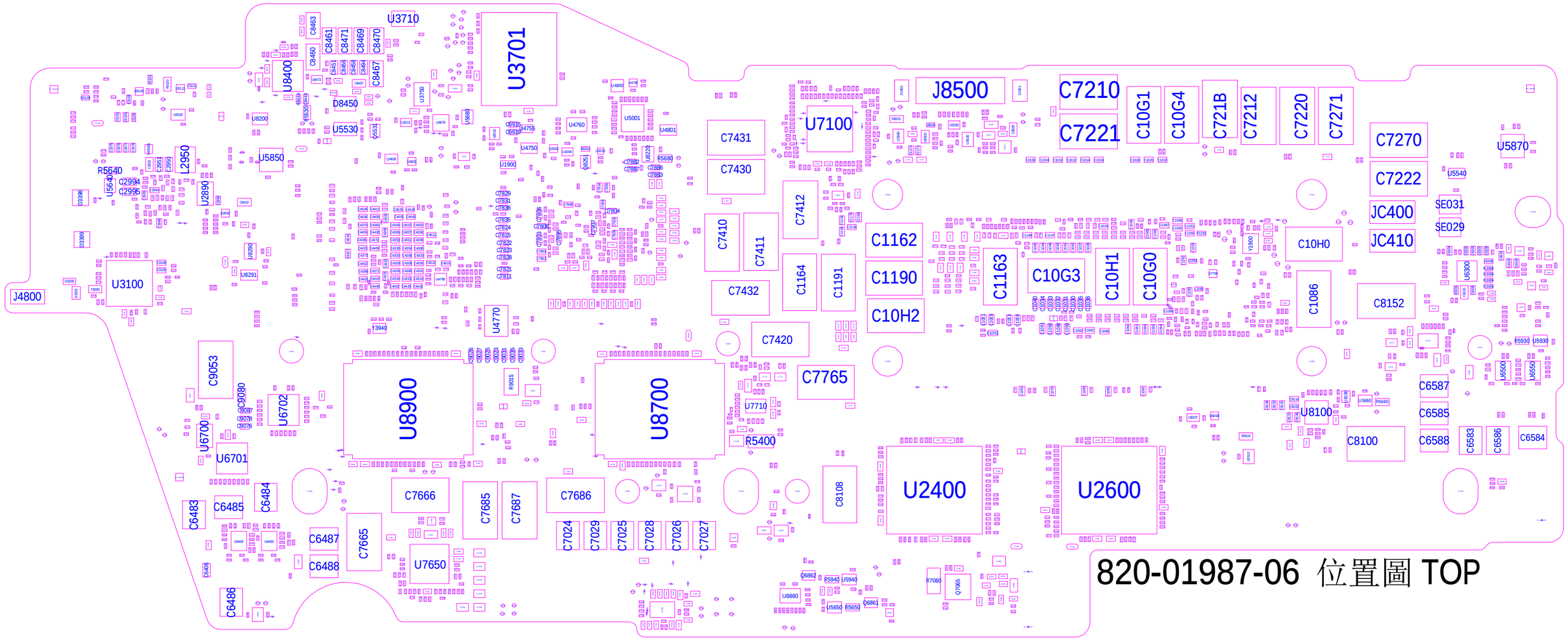

820-01987-06 位置圖 TOP

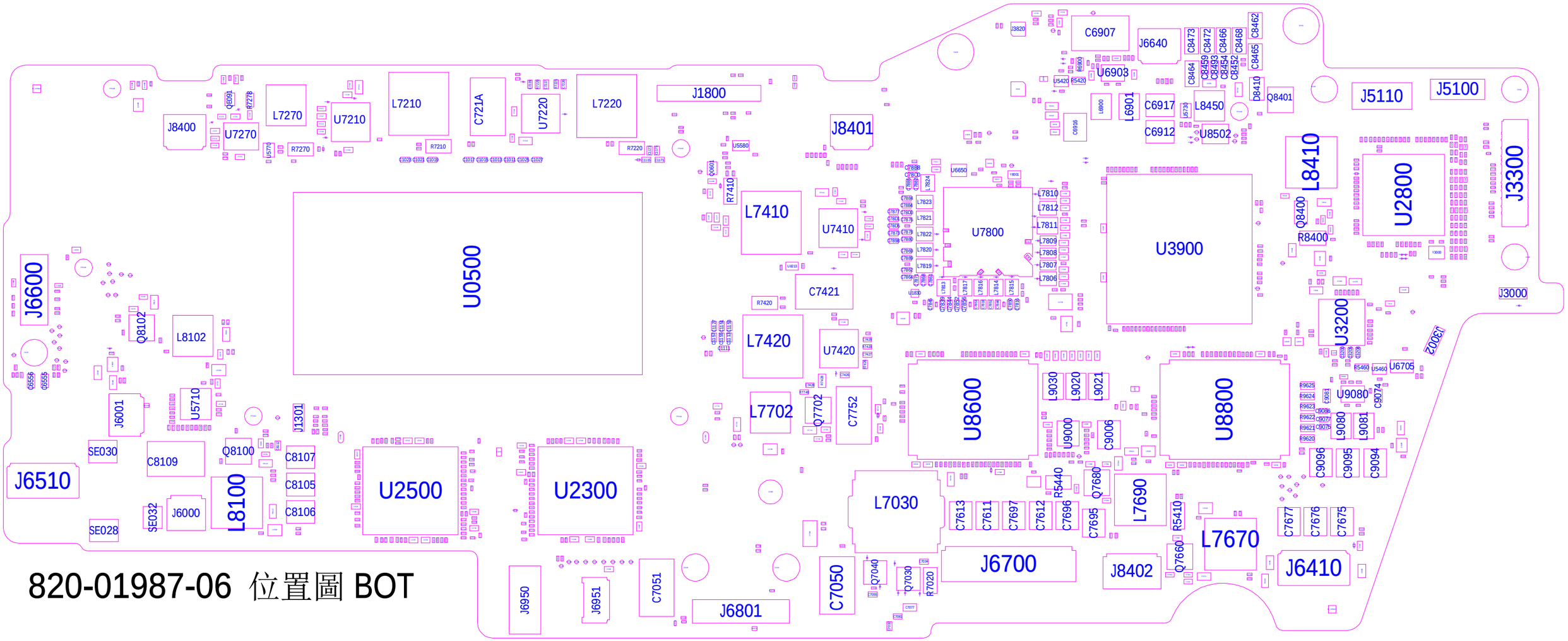

820-01987-06 位置圖 BOT